COOPER LEVENSON
ATTORNEYS AT LAW

1125 Atlantic Avenue
Atlantic City, NJ 08401
Phone: 609.344.3161
Toll Free: 800.529.3161
Fax: 609.344.0939
www.cooperlevenson.com

NICHOLAS F. TALVACCHIA
Also Admitted to PA Bar
EMAIL: ntalvacchia@cooperlevenson.com

Direct Phone: (609) 572-7544
Direct Fax: (609) 572-7545

FILE NO. 64788/00001

March 17, 2023

Via Hand Delivery

Robert Reid
Land Use Regulation Enforcement Officer
Casino Reinvestment Development Authority
15 South Pennsylvania Avenue
Atlantic City, NJ 08401

Re: DGMB Casino, LLC and IMCMV Atlantic City, LLC
Block 1, Lots 131 to 142 and 142.01 and including
Beach Lots 33 and 34, located south of 1133 Boardwalk

Dear Mr. Reid:

We are the attorneys for Applicants, DGMB Casino, LLC and IMCMV Atlantic City, LLC, with respect to an application for amended site plan approval including variance relief for parking to construct/install seasonal amenities including a beverage trailer, signage, a stage with awning, seating area adjacent to the stage, a themed Boardwalk entry portal and a shed for beach chair and umbrella storage on the above referenced property (the "Property").

We are providing the following to the CRDA and its professionals:

1. Original and one (1) copy of the CRDA Land Use Application including Project Narrative and Corporate Disclosures;

2. Two (2) copies of the Minor Site Plan Checklists (Form #5);

3. Two (2) copies of the "c" Variance Checklist (Form #12);

4. Two (2) copies of the "Site Plan Amendment" prepared by Arthur W. Ponzio, Jr., P.P. and P.L.S. dated March 17, 2023, which contains one (1) page;

5. Two (2) sets of pictures of the proposed stage and awning;

6. Two (2) sets of site pictures;

7. Two (2) copies of the redacted Lease between DGMB and City of Atlantic City;

8. Two (2) copies of the 200 ft. Property Owners List dated March 17, 2023;

9. Two (2) copies of the Certifications of Payment for the subject property;

10. One (1) copy of the Escrow Setup Information form;

11. Flash drive with a digital copy of the submission; and

12. Checks in the amounts of $300.00 and $250.00 for the application fees and $2,000.00 and $2,200.00 for the escrow fees.

Please review the enclosed information and contact me if you require additional information.

Thank you for your kind attention to this matter.

Very truly yours,
Cooper Levenson, P.A.

Nicholas F. Talvacchia

NFT/ln
Enclosures
cc: Scott G. Collins, Esquire *(w/Enclosures, via E-mail)*
Christine A. Nazzaro-Cofone, PP, AICP, Cofone Consulting Group, LLC *(w/ Enclosures, via E-mail)*
Justin Auciello, PP, AICP, Cofone Consulting Group, LLC *(w/ Enclosures, via E-mail)*
Carolyn Feigin, PE, PP, ARH Associates *(w/Enclosures, via E-mail)*
Atlantic City Planning Dept. (*w/ Enclosures, via Hand Delivery*)
Atlantic City Engineering Department (*w/ Enclosures, via Hand Delivery*)
DGMB Casino, LLC (*w/ Enclosures, via E-mail*)
IMCMV Atlantic City, LLC (*w/ Enclosures, via E-mail*)
Arthur W. Ponzio, Jr., P.P. and P.L.S. (*w/ Enclosures, via E-mail*)

City of Atlantic City
LAND USE APPLICATION

City of Atlantic City: (Check where applicable)

☐ **AC Planning Division Jurisdiction**
City of Atlantic City Planning Board
1301 Bacharach Boulevard
City Hall-Suite 508
Atlantic City, NJ 08401
609-347-5404

CRDA: (Check where applicable)

☑ **NJ CRDA LURED Jurisdiction**
Casino Reinvestment Development Authority
15 S Pennsylvania Avenue
Atlantic City, NJ 08401
609-347-0500

To be completed by staff only.

Date Filed_____ Application No._____
Application Fees: _____ Escrow Deposit_____

Scheduled for:
Review for Completeness _____ Hearing: _____

==========

1. SUBJECT PROPERTY

Location: Beach Lot 33 and 34, located South of 1133 Boardwalk

Tax Map Page _____ Block 1 Lot(s) Lots 131 to 142 and 142.01
Page _____ Block _____ Lot(s) _____
Page _____ Block _____ Lot(s) _____

Dimensions Frontage _____ Depth _____ Total Area Total occupancy area of temporary/seasonal structures is 2,800 sq. ft.

Zoning District B

2. APPLICANT

Name DGMB Casino, LLC and IMCMV Atlantic City, LLC
Email c/o Nicholas F. Talvacchia, Esquire ntalvacchia@cooperlevenson.com
Address 1133 Boardwalk, Atlantic City, NJ 08401
Telephone Number c/o NFT 609-572-7544
Applicant is a: Corporation ☐ Partnership ☑ Individual ☐

3. If Owner is other than the applicant, provide the following information on the Owner(s):
Owner's Name City of Atlantic City
Email _____
Address 1301 Bacharach Boulevard, Atlantic City, NJ 08401
Telephone Number 609-347-5510

4. DISCLOSURE STATEMENT

Pursuant to N.J.S 40:55D-48.1 [Application by corporation or partnership; list of stockholders owning 10% of stock or 10% interest in partnership.] Disclosure of owners of organization and property subject to application. [A corporation or partnership applying to a governing body of a municipality]Any organization making an application for development under this act [for permission to subdivide a parcel of land into six or more lots, or applying for a variance to construct a multiple dwelling of 25 or more family units or for approval of a site to be used for commercial purposes] shall list the names and addresses of all members, stockholders or individual partners (collectively, "interest holders")[owning at least 10% of its stock of any class or at least 10% of the interest in the partnership], including any other organization holding at least a 10% ownership interest in the organization, and shall also identify the owner of the property subject to the application, including any organization holding at least a 10% ownership interest in the property [as the case may be]. In accordance with 40:55D-48.2 [Disclosure of 10% ownership interest of corporation or partnership which is 10% owner of applying corporation or partnership.] Listing of names and addresses of interest holders of applicant and owner organization. If [a corporation or partnership] an organization owns an interest equivalent to 10% or more of another organization the stock of a corporation, or 10% or greater interest in a partnership, subject to the disclosure requirements hereinabove described, [pursuant to section 1 of this act that organization shall list the names and addresses of its interest holders holding 10% or greater interest in the [partnership, as the case may be, and] organization. [This requirement shall be followed by every corporate stockholder or partner in a partnership, until the names and addresses of the stockholders and individual partners, exceeding the 10% ownership criterion established in this act, have been listed.] In accordance with recently added 40:55D-48.3 Disclosure of all officers and trustees of a non-profit organization. A non-profit organization filing an application for development under this act shall list the names and addresses of all officers and trustees of the non-profit organization. In accordance with 40:55D-48.4 [Failure to comply with act; disapproval of application.] Approval of application. *a.* No municipal planning board, board of adjustment or [municipal] governing body shall approve the application of any [corporation or partnership] organization or non-profit organization which does not comply with this act. Any approval not in compliance with this act shall be voidable in a proceeding in lieu of prerogative writ in the Superior Court. b. Any party, including any member of the public, may institute a proceeding in lieu of prerogative writ in the Superior Court to challenge any PROPOSED AMENDMENTS TO MUNICIPAL LAND USE LAW approval granted by a municipal planning board, board of adjustment or governing body on the grounds that such action is void for the reasons stated in subsection a. of this section, and if the court shall find that the approval was not in compliance with this act, the court may declare the approval to be void. In accordance with 40:55D-48.5 [Concealing names of owners;] Organization or non-profit organization failing to disclose; fine. Any [corporation or partnership which conceals] organization or nonprofit organization failing to disclose in accordance with this act, [the names of stockholders owning 10% or more of its stock, or of individual partners owning a 10% or greater interest in the partnership, as the case may be,] shall be subject to a fine of $1,000 to $10,000, which shall be [recovered] recoverable in the name of the municipality in any court of record in the State in a summary manner pursuant to the "Penalty Enforcement Law" (N.J.S.A. 2A:58-1 et seq.).

Name See attached Address _____ Interest _____
Name Disclosure Statements Address _____ Interest _____
Name _____ Address _____ Interest _____
Name _____ Address _____ Interest _____
Name _____ Address _____ Interest _____

5. PROPERTY INFORMATION:

Restrictions, covenants, easements, association by-laws, existing or proposed on the property:
Yes [attach copies]_____ No X Proposed_____
Present use of the premises: Beach Lot 34: Beach Bar and amentities, tables and chairs, fire pit, hammocks, decking, sand bag toss and thatched umbrellas; and Beach Lot 33: one (1) beach shed for Resorts beach chair and umbrella concession and storage.

Note: All deed restrictions, covenants, easements, association bylaws, existing and proposed must be submitted for review and must be written in easily understandable English in order to be approved.

6. **Applicant's Attorney** Nicholas F. Talvacchia, Esquire
Email ntalvacchia@cooperlevenson.com
Address Cooper Levenson, P.A., 1125 Atlantic Avenue, Third Floor, Atlantic City, NJ 08401
Telephone Number 609-572-7544
FAX Number 609-572-7545

7. **Applicant's Engineer** Arthur W. Ponzio, Jr., P.P and P.L.S.
Email aponzio@aponzio.com
Address 400 Dover Avenue, Atlantic City, NJ 08401
Telephone Number 609-344-8194
FAX Number_____

8. Applicant's Planning Consultant Same as # 7 above.
Email _____
Address _____
Telephone Number _____
FAX Number_____

9. **Applicant's Traffic Engineer** N/A
Email _____
Address _____
Telephone Number _____
FAX Number_____

10.List any other **Expert** who will submit a report or who will testify for the Applicant: [Attach additional sheets as may be necessary]

Name ____N/A_____

Field of Expertise_____

Email _____

Address _____

Telephone Number _____

FAX Number_____

11. APPLICATION REPRESENTS A REQUEST FOR THE FOLLOWING:

SUBDIVISION:

_____ Administrative Review of Minor Subdivision Plan

_____Administrative Review of Major Subdivision Plan

_____ Minor Subdivision Approval

_____ Major Subdivision Approval [Preliminary]

_____ Major Subdivision Approval [Final]

Number of lots to be created _____ Number of proposed dwelling units _____ (including remainder lot) (if applicable)

SITE PLAN:

_____Administrative Review of Minor Site Plan

_____ Administrative Review of Major Site Plan

___X___ Minor Site Plan Approval

_____ Major Preliminary Site Plan Approval [Phases (if applicable) ___]

_____ Major Final Site Plan Approval [Phases (if applicable) ___]

_____ Amendment or Revision to an Approved Site Plan

Area to be disturbed (square feet) _____

Total number of proposed dwelling units _____

_____Request for Waiver From Site Plan Review and Approval

Reason for request: _____

_____

MISC:

_____ Administrative Review

_____ Appeal decision of an Administrative Officer [N.J.S. 40:55D- 70a]

_____ Map or Ordinance Interpretation of Special Question [N.J.S. 40:55D-70b]

_____ Variance Relief (hardship) [N.J.S. 40:55D-70c(1)]

___X___ Variance Relief (substantial benefit) [N.J.S. 40:55D-70c(2)]

_____ Variance Relief (use) [N.J.S. 40:55D-70d]

_____ Conditional Use Approval [N.J.S. 40:55D-67]

_____ Direct issuance of a permit for a structure in bed of a mapped street, public drainage way, or flood control basin [N.J.S. 40:55D-34]

_____ Direct issuance of a permit for a lot lacking street frontage [N.J.S. 40:55D-35]

12. Section(s) of Ordinance from which a **variance is requested and justification for said request**: [attach additional pages as needed] N.J.A.C. 19:66-5.8

13. **Waivers Requested** of Development Standards and/or Submission and justification for request.
Requirements: [attach additional pages as needed] N/A

14. Attach a copy of the Notice to appear in the official newspaper of the municipality and to be mailed to the owners of all real property, as shown on the current tax duplicate, located within the State and within 200 feet in all directions of the property, which is the subject of this application. The Notice must specify the sections of the Ordinance from which relief is sought, if applicable.
The publication and the service on the affected owners must be accomplished at least 10 days prior to the date scheduled by the Administrative Officer for the hearing. An affidavit of service on all property owners and a proof of publication must be filed before the application will be complete and the hearing can proceed.

15. **Explain in detail the exact nature of the application and the changes to be made at the premises, including the proposed use of the premises:**
[attach pages as needed] See Project Narrative attached.

16. Is a public water line available? N/A
17. Is public sanitary sewer available? Not required
18. Does the application propose a well and septic system? No
19. Have any proposed new lots been reviewed with the Tax Assessor to determine appropriate lot and block numbers? N/A
20. Are any off-tract improvements required or proposed? N/A
21. Is the subdivision to be filed by Deed or Plat? N/A
22. What form of security does the applicant propose to provide as performance and maintenance guarantees? N/A

23. Other approvals, which may be required and date plans submitted:

	Yes	No	Date Plans Submitted
Atlantic City Municipal Utilities Authority		X	
Atlantic County Health Department	TBD		
Atlantic County Planning Board		X	
Atlantic County Soil Conservation Dist.		X	
NJ Department of Environmental Protection	X		
Sewer Extension Permit		X	
Sanitary Sewer Connection Permit		X	
Stream Encroachment Permit		X	
Waterfront Development Permit		X	
Wetlands Permit		X	
Tidal Wetlands Permit		X	
Potable Water Construction Permit		X	
Other		X	
NJ Department of Transportation		X	
Public Service Electric & Gas Company		X	
DEP Coastal General Permit	X		

24. Certification from the Tax Collector that all taxes due on the subject property have been paid. To be provided.

25. List of Maps, Reports and other materials accompanying the application (attach additional pages as required for complete listing).

Quantity	Description of Item
2	"Site Plan Amendment" prepared by Arthur W. Ponzio, Jr., dated March 17, 2023

26. The Applicant hereby requests that copies of the reports of the professional staff reviewing the application be provided to the following of the applicant's professionals:
Specify which reports are requested for each of the applicant's professionals or whether all reports should be submitted to the professional listed.

Applicant's Professional Reports Requested All

Attorney

Engineer

CERTIFICATIONS

27. I Nicholas F. Talvacchia, Esquire certify that the foregoing statements and the materials submitted are true. I further certify that I am the individual applicant or that I am an Officer of the Corporate applicant and that I am authorized to sign the application for the Corporation or that I am a general partner of the partnership applicant.
[If the applicant is a corporation, this must be signed by an authorized corporate officer. If the applicant is a partnership, this must be signed by a general partner.]

Sworn to and subscribed before me this
17th day of March, 20 23

LAURA M NEWTON
A Notary Public of New Jersey
My Commission Expires 06/29/2025

NOTARY PUBLIC

SIGNATURE OF APPLICANT Nicholas F. Talvacchia, Esquire
Attorney for Applicants

28. I certify that I am the Owner of the property which is the subject of this application, that I have authorized the applicant to make this application and that I agree to be bound by the application, the representations made and the decision in the same manner as if I were the applicant.
[If the owner is a corporation, this must be signed by an authorized corporate officer. If the owner is a partnership, this must be signed by a general partner.]

Sworn to and subscribed before me this
_____ day of _____, 20 _____

NOTARY PUBLIC

SIGNATURE OF OWNER

29. I understand that the sum of $ 4,200 has been deposited in an escrow account (Builder's Trust Account). In accordance with Land Use Fees and Escrow Deposit Requirements, I further understand that the escrow account is established to cover the cost of professional services including engineering, planning, legal and other expenses associated with the review of submitted materials and the publication of the decision by the Board. Sums not utilized in the review process shall be returned. If additional sums are deemed necessary, I understand that I will be notified of the required additional amount and shall add that sum to the escrow account within fifteen (15) days.

March 17, 2023
Date

SIGNATURE OF APPLICANT Nicholas F. Talvacchia, Esquire
Attorney for Applicants

PROJECT NARRATIVE

Block 1, Part of Lot 131 to 142 and 142.01
and includes Beach Lots 33 and 34

March 17, 2023

DGMB Casino, LLC and IMCMV Atlantic City, LLC ("Applicants") propose to construct/install seasonal amenities including the following on Beach Lot 34: (a) an approximately 8 ft. wide x 20 ft. long x 8 ft. high beverage trailer to allow retail sales of alcoholic and non-alcoholic beverages located on the sand between the Boardwalk and the dune just south of the Boardwalk entry portal; (b) one (1) approximately 40 sq. ft. wall sign on the beverage trailer; (c) one (1) ground sign next to the beverage trailer approximately 9 sq. ft. in area with a height of 5 ft. maximum; (d) 30 ft. x 17 ft. x 12.5 ft. stage with awning; (e) approximately 2,000 sq. ft. seating area adjacent to the stage; and (f) a themed Boardwalk entry portal approximately 15 ft. wide x 15 ft. high. The following is proposed on Beach Lot 33: (a) one (1) shed for beach chair and umbrella concession and storage; and (b) approximately 30 sq. ft. wall sign on the shed. The property consists of Block 1, part of Lots 131 to 142 and 142.01 and includes Beach Lots 33 and 34 (the "Property"). Note that Beach Lots 33 and 34 are leased from the City. The balance of the Property is owned by DGMB.

The Application requires amended site plan approval and variance relief for parking. The approvals of the current beach bar and amenities were previously approved by CRDA and the beach chair and umbrella storage shed pre-dates the CRDA's land use jurisdiction of the beach. The Property currently consists of a beach bar, tables and chairs, amenities such as a fire pit, hammocks, decking, sand bag toss, thatched umbrellas, public beach and one beach chair and umbrella concession and storage shed. All of the uses are permitted. A c(2) variance is required for relief from the parking requirements. The parking calculation is: 20 tables x 4 seats each equals 80 additional seats divided by 30% results in a 24 spaces required.

This project will provide a benefit to the City and its visitors by providing a unique entertainment experience. The project is consistent with the Tourism District legislation to promote tourism in Atlantic City. Additional testimony will be provided at the time of the hearing.

Applicant also requests any variances, waivers, exceptions or other relief that the Land Use Board deems necessary and/or appropriate.

DISCLOSURE STATEMENT

LIST OF NAMES AND ADDRESSES OF OFFICERS, DIRECTORS, AND INDIVIDUALS OR ENTITIES OWNING 10% OR MORE INTEREST IN THE APPLICANT (N.J.S.A. 40:50D-48.1)

IMCMV Atlantic City, LLC

The persons or entities with a 10% or greater interest in applicant, IMCMV Atlantic City, LLC ("Applicant"):

IMCMV Holdings, Inc.
4901 Vineland Road, Suite 600
Orlando, FL 32811

Ownership of IMCMV Holdings, Inc.

International Meal Company Alientacao S.A.,
A Brazilian public company tht does not trade in the US

DISCLOSURE STATEMENT

LIST OF NAMES AND ADDRESSES OF OFFICERS, DIRECTORS, AND INDIVIDUALS OR ENTITIES OWNING 10% OR MORE INTEREST IN THE APPLICANT (N.J.S.A. 40:50D-48.1)

DGMB CASINO LLC

The persons or entities with a 10% or greater interest in applicant, DGMB Casino LLC. ("Applicant"):

DGMB Casino Holding LLC. – 99.5% of Applicant
1133 Boardwalk
Atlantic City, NJ 08401

Ownership of DGMB Casino Holding LLC

JEMB Resorts LLC - 90%
150 Broad Street
Suite 800
New York, NY 10038

MGA Holding NJ, LLC – 10%
1 Mohegan Sun Boulevard
Uncasville, CT 06382

Ownership of JEMB Resorts LLC over 10%

Joseph Jerome - 25%
150 Broad Street
Suite 800
New York, NY 10038

Michele Bailey-Horovits - 25%
150 Broad Street
Suite 800
New York, NY 10038

Bailey Family 1998 Grandchildren's Trust – 45%
150 Broad Street
Suite 800
New York, NY 10038

Ownership of MGA Holding NJ, LLC

Mohegan Gaming Advisors, LLC – 100% (Delaware LLC)
1 Mohegan Sun Blvd
Uncasville, CT 06382

Subsidiary of The Mohegan Tribe of Indians in Connecticut

15 South Pennsylvania Avenue

Atlantic City, NJ 08401

NJ CRDA – City of Atlantic City - Minor Site Plan Checklist (Form # 5)

(An Application for Development that does not exceed one acre in size, maximum building gross floor area of 10,000 square feet, a maximum of three stories and no more than twenty-five parking spaces)

REQUIRED APPLICATION ITEMS

Project Name: IMCMV Atlantic City, LLC and DGMB Casino, LLC Application # _____

Prepared by: Arthur W. Ponzio, Jr. Title P.P and P.L.S. date 03/17/2023

Note : Five (5) copies of plans and supporting documents are required as the initial submission. Ten (10) copies of plans are required for final sign-off and distribution.

Item #	Description	REQUIRED	SUBMITTED	WAIVER REQUESTED BY APPLICANT	Waiver Recommended by Reviewer
1	Completed Land Use Application Form	X	X		
2	Payment of Required Application and Escrow Fees (19:66-3.4)	X	X		
3	Name and address, email address of property owner and applicant.	X	X		
4	Proof of real estate taxes and other assessments paid.		X		
5	Name, signature, license number, seal and address of each professional consultant, as applicable, involved in preparation of required documents.	X	X		
6	Project narrative describing existing conditions, surrounding uses and the proposed development including list of variance and design waiver relief sought, if any.	X	X		
7	Title block denoting type of application, tax map sheet, project address, block and lot, and street location.	X	X		
8	Proof of ownership of property. (Report of title, copy of deed AS FILED with the Atlantic County Clerk's Office, affidavit or other documentation evidencing ownership.)	X		X	
9	Consent of property owner to applicant to development project.	X	X		

10	FOR ADMINISTRATIVE REVIEW AND APPROVAL: Certification from Applicant's licensed professional that the development proposed meets all requirements and no variance or design waivers are requested. (19:66-4.6)	X	N/A		
11	Zoning Schedule listing: Use, lot area, lot width, lot depth, yard setbacks, floor area ratio, density, building coverage, building height and parking requirements, including existing and proposed with conformity status of each.	X	N/A		
12	Certified List of Property Owners within 200' Radius of the subject property by City of Atlantic City Tax assessor's Office.	X	X		
13	Public Notice in compliance with NJSA 40:55D-12.	X	TO BE SUBMITTED		
14	North arrow, scale and graphic scale.	X	X		
15	Signature blocks for Hearing Officer, Land Use Regulation Enforcement Officer, Engineer and Planner.	X	X		
16	Key map(s) at a legible scale showing location of property with existing structures, uses, streets, public right of ways, municipal boundaries, public parks, beaches, environmental sensitive areas, zoning district boundaries within 200 feet of the subject property. Property tax lots within 200 feet of the subject property taken from the most recent municipal tax map records.	X	X		
17	List of any existing or proposed deed restrictions, easements, covenants, Homeowners Association Agreements, etc. as recorded or in recordable form if proposed.	X	N/A		
18	List of development stages or phases, if any.	X	N/A		
19	List of approvals or permits required by other regulatory authorities having jurisdiction and the status of same.	X	X		

20	Land Title Survey and topographic survey depicting existing conditions prepared by New Jersey licensed professional land surveyor. All elevations shall be based on NAVD 1988. The horizontal datum shall on the NJ State Plane Coordinate System (NAD 1983) Survey shall include all existing conditions, including buildings, structures, parking areas with parking space striping, driveways, walkways, site lighting/fixtures, fences, stoops, stairs, porches, easements, walls, patios, curbs, roof overhangs, overhead wires, bay windows, building setbacks of building on-site and adjoining the site, landscape areas, trees, utility poles, flag poles, directional and identification signs, spot elevations, contours in one foot intervals, FEMA Flood Zone, State Claim areas, utility poles, utilities such as water, sanitary sewer, storm sewer, electric, gas, cable, telephone, etc. Improvements in adjoining right-of-ways / roadways / streets including painted traffic markings.	X		X	
21	Stormwater management plans and drainage calculations. (19:66-7.5)	X	N/A		
22	Site Plan depicting proposed buildings, structures, existing and proposed building setbacks, landscape areas, lighting / fixtures, lighting intensity, location of identification signage and directional signs, trash enclosure, building setback lines (dashed) and their dimensions from the property lines, parking area plan showing spaces, size and type, aisle width, curb cuts, drives, driveways, and all ingress and egress areas and dimensions.	X	X		
23	Grading plan depicting direction of flow of surface run-off, spot elevations, contours within 1 foot intervals, stormwater management structures	X	N/A		
24	Landscaping Plan, details and plant schedule (19:66-7.6)	X	N/A		
25	Lighting plan and details (19:66-7.10)	X	N/A		
26	Soil Erosion and Sediment Control Plan. (Required for soil disturbance of 5,000 sq. ft. or greater)	X	N/A		

27	Plans of proposed utility layouts including sanitary sewer, water, gas, telephone, cable and electricity and showing proposed connections to existing or any proposed utility systems.	X	N/A		
28	Road and paving cross-sections and profiles.	X	N/A		
29	Solid and liquid waste management plan.	X	N/A		
30	Vehicular and pedestrian circulation patterns, Traffic control signs, directional signs and Sight triangles	X	N/A		
31	Preliminary architectural plan and elevations, and areas and type of each proposed use.	X		X	
32	Estimate of costs of on-site and off-site improvements [19:66-3.4 (b)]	X		X	
33	Electronic copy of the full application including: application, photos, maps, reports, plans and other exhibits in pdf format. Maximum size of file(s) 4 MB.	X	X		
34	Performance guarantee [19:66-3.4 (b)]	X		X	
35	Maintenance guarantee (19:66-16.3)	X		X	
36	Inspection Fees (19:66-16.1)	X		X	

15 South Pennsylvania Avenue

Atlantic City, NJ 08401

NJ CRDA – City of Atlantic City – "c" Variance Checklist (Form #12)

REQUIRED APPLICATION ITEMS

Project Name: IMCMV Atlantic City, LLC and DGMB Casino, LLC Application # _____

Prepared by: Arthur W. Ponzio, Jr. Title P.P. and P.L.S. date 03/17/2023

Note : Five (5) copies of plans and supporting documents are required as the initial submission. Ten (10) copies of plans are required for final sign-off and distribution.

Item #	Description	REQUIRED	SUBMITTED	WAIVER REQUESTED BY APPLICANT	Waiver Recommended by Reviewer
1	Completed Land Use Application Form	X	X		
2	Payment of Required Application and Escrow Fees (19:66-4.3)	X	X		
3	Name and address, email address of property owner and applicant.	X	X		
4	Proof of real estate taxes and other assessments paid.	X	X		
5	Name, signature, license number, seal and address of each professional consultant, as applicable, involved in preparation of required documents.	X	X		
6	Color Photographs of site from four (4) different viewpoints.	X	X		
7	Project narrative describing existing conditions, surrounding uses and the proposed development including list of "c" variance(s) and design waiver relief sought, if applicable.	X	X		
8	Title block denoting type of application, tax map sheet, project address, block and lot, and street location.	X	X		
9	Proof of ownership of property. (Report of title, copy of deed AS FILED with the Atlantic County Clerk's Office, affidavit or other documentation evidencing ownership.)	X		X	
10	Consent of property owner to applicant to development project.	X	X		
11	Zoning Schedule listing: Use, lot area, lot	X		X	

	width, lot depth, yard setbacks, floor area ratio, density, building coverage, building height and parking requirements, including existing and proposed with conformity status of each.				
12	Certified List of Property Owners within 200' Radius of the subject property by City of Atlantic City Tax assessor's Office.	X	X		
13	Public Notice in compliance with NJSA 40:55D-12.	X	TO BE SUBMITTED		
14	North arrow, scale and graphic scale.	X	X		
15	Signature blocks for Hearing Officer, Land Use Regulation Enforcement Officer, Engineer and Planner.	X	X		
16	Key map(s) at a legible scale showing location of property with existing structures, uses, streets, public right of ways, municipal boundaries, public parks, beaches, environmental sensitive areas, zoning district boundaries within 200 feet of the subject property. Property tax lots within 200 feet of the subject property taken from the most recent municipal tax map records.	X	X		
17	List of any existing or proposed deed restrictions, easements, covenants, Homeowners Association Agreements, etc. as recorded or in recordable form if proposed.	X	N/A		
18	List of development stages or phases, if any.	X	N/A		
19	List of approvals or permits required by other regulatory authorities having jurisdiction and the status of same.	X			
20	Land Title Survey and topographic survey depicting existing conditions prepared by New Jersey licensed professional land surveyor. All elevations shall be based on NAVD 1988. The horizontal datum shall on the NJ State Plane Coordinate System (NAD 1983) Survey shall include all existing conditions, including buildings, structures, parking areas with parking space striping, driveways, walkways, fences, stoops, stairs, porches, easements, walls, patios, curbs, roof overhangs, overhead wires, bay windows, building setbacks of building on-site and adjoining the site, landscape areas, trees, utility poles, flag poles, directional and identification signs, spot elevations, contours in one foot intervals, FEMA Flood Zone, State Claim areas, utility poles, utilities such as water, sanitary sewer, storm sewer, electric, gas, cable, telephone, etc. Improvements in adjoining right-of-ways / roadways / streets including painted traffic markings.	X		X	

21	Site Plan depicting proposed buildings, structures, existing and proposed building setbacks, landscape areas, location of identification signage and directional signs, trash enclosure, building setback lines (dashed) and their dimensions from the property lines, parking area plan showing spaces, size and type, aisle width, curb cuts, drives, driveways, and all ingress and egress areas and dimensions.	X	X		
22	Preliminary architectural plan and elevations, and areas and type of each proposed use.	X		X	
23	Electronic copy of the full application including: application, photos, maps, reports, plans and other exhibits in pdf format. Maximum size of file(s) 4 MB.	X	X		

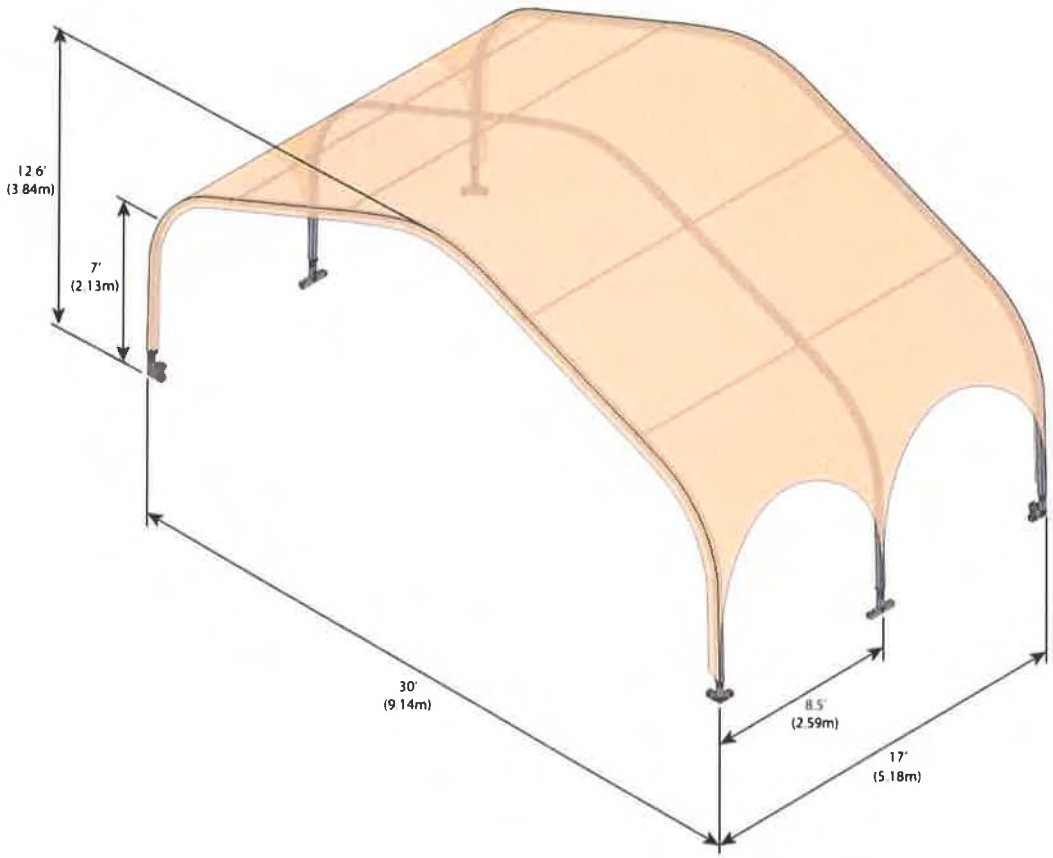
12.6'
(3.84m)
7'
(2.13m)
30'
(9.14m)
8.5'
(2.59m)
17'
(5.18m)

SOMERS POINT RECREATION
• NO MOTORIZED VEHICLES EXCEPT EMERGENCY AND MAINTENANCE VEHICLES SHALL BE PERMITTED IN THE BATHING AREA DURING ITS USE
• NO BOATING WATER SKIING SAILBOATING WINDSURFING SCUBA DIVING OR SURFBOARDING SHALL BE PERMITTED IN THE SWIMMING AND BATHING AREA WHILE IN USE
• ROPE DROPS SHALL NOT BE PERMITTED EXCEPT THOSE LICENSED AND INSPECTED BY THE DEPARTMENT OF COMMUNITY AFFAIRS PURSUANT TO N.J.S.A. 5:3-31 THROUGH 5
NO
DOGS

Google

A-71/20
(EW)
Lots 33/34
Resorts

LEASE

THIS LEASE (the "Lease') made by and between the **CITY OF ATLANTIC CITY**, a Municipal Corporation of the State of New Jersey, c/o City Solicitor's Office, Room 406, City Hall, 1301 Bacharach Boulevard, Atlantic City, New Jersey 08401 (hereinafter referred to as the "Landlord"; and **DGMB Casino, LLC, dba RESORTS HOTEL CASINO,** located at 1133 Boardwalk, Atlantic City, New Jersey 08401 (hereinafter referred to as the ("**TENANT**");

WITNESSETH

THAT, the Landlord does hereby lease to the Tenant and the Tenant does hereby rent from the Landlord, a certain portion of the Beach in Atlantic City, New Jersey shown as **BEACH LOTS(s) 33 & 34** on the attached Beach Lot Map prepared by the City Engineer and dated February 13, 2013, and generally described as that area of the Atlantic City Beach lying between):

BEACH LOT 33 ("Beach Lot") on the attached Beach Lot Map prepared by the City Engineer and dated February 13, 2013 and generally described as that area of the Atlantic City Beach lying between Mid-Ocean to Chalfonte Avenue from the Southerly boundary of the Atlantic City Boardwalk to the Mean High Water line of the Beach ("Leased Beach" or "Premises");

BEACH LOT 34 ("Beach Lot") on the attached Beach Lot Map prepared by the City Engineer and dated February 13, 2013 and generally described as that area of the Atlantic City Beach lying between Chalfonte to Steeplechase Pier from the Southerly boundary of the Atlantic City Boardwalk to the Mean High Water line of the Beach ("Leased Beach" or "Premises");

FOR A TERM OF FIVE (5) years, commencing on May 1, 2020 and ending on April 30, 2025,

[redacted]

[redacted]

ATTEST:

Paula Geletei

Paula Geletei, City Clerk

CITY OF ATLANTIC CITY

BY: Marty Small Sr.

Marty Small, Sr., Mayor

DATE: 7/13/2020

ATTEST:

Cedrick Massey, Paralegal

TENANT: DGMB CASINO, LLC D/B/A RESORTS HOTEL & CASINO

BY: Timothy A. Ebling

Timothy A. Ebling, VP & C.F.O.

The within Lease approved as to form and execution.

Date: 7-13-20

BY:

Michael J. Perugini, Deputy City Solicitor

2020 Resorts
Lots 33 & 34

City of Atlantic City
Department of Planning & Development

Suite 506 City Hall
Atlantic City, New Jersey 08401-4603
TEL 609.347.5417
Email: jhoward@acnj.gov

Jacques A. Howard

March 17, 2023

Cooper Levenson
Nicholas F. Talvacchia
1125 Atlantic Ave, 3rd Floor
Atlantic City, NJ 08401

Re: IMCMV Atlantic City, LLC and DGMB Casino, LLC
Block 1, Lots 131, 132, 133, 134, 135, 136, 137, 138, 139, 140, 141, 142, 142.01 Block 56, Lots 14-15 and 20-25, 27, 29-31, 38, 48-50
Block 57, Lot 9
Block 58, Lots 7-11
Block 59, Lot 1
Block 60, Lots 4-37, 39.01 and 39.02

Dear Mr. Nicholas F. Talvacchia.:

Please accept this letter as a response to your recent request to obtain a Certified List of Property Owners Located within 200 feet of the above referenced property and a list of the Utility Companies. Attached to this letter is the official list.

This should satisfy this request. Please do not hesitate to contact this office in the event that you have any questions or require additional information.

Sincerely Yours,
The City of Atlantic City

Jacques A. Howard

Jacques A. Howard

Assistant Director
Department of Planning and Development

City of Atlantic City

Buffer Report

Highlighted feature(s)

Subject Property (71)

BLOCK	LOT	QUAL	Location	Owner	Street Addrress	City\State	ZipCode
1	131		PUBLIC BEACH	CITY OF ATLANTIC CITY	1301 BACHARACH BLVD	ATLANTIC CITY, NJ	08401
1	132		SOUTH CAROLINA AVE STREET	CITY OF ATLANTIC CITY	1301 BACHARACH BLVD	ATLANTIC CITY, NJ	08401
1	133		PUBLIC BEACH	CITY OF ATLANTIC CITY	1301 BACHARACH BLVD	ATLANTIC CITY, NJ	08401
1	134		PUBLIC BEACH	CITY OF ATLANTIC CITY	1301 BACHARACH BLVD	ATLANTIC CITY, NJ	08401
1	135		PUBLIC BEACH	CITY OF ATLANTIC CITY	1301 BACHARACH BLVD	ATLANTIC CITY, NJ	08401
1	136		PUBLIC BEACH	CITY OF ATLANTIC CITY	1301 BACHARACH BLVD	ATLANTIC CITY, NJ	08401
1	137		PUBLIC BEACH	CITY OF ATLANTIC CITY	1301 BACHARACH BLVD	ATLANTIC CITY, NJ	08401
1	138		PUBLIC BEACH	CITY OF ATLANTIC CITY	1301 BACHARACH BLVD	ATLANTIC CITY, NJ	08401
1	139		NORTH CAROLINA AVE STREET	CITY OF ATLANTIC CITY	1301 BACHARACH BLVD	ATLANTIC CITY, NJ	08401
1	140		PUBLIC BEACH	CITY OF ATLANTIC CITY	1301 BACHARACH BLVD	ATLANTIC CITY, NJ	08401
1	141		MANSION AVE STREET END	CITY OF ATLANTIC CITY	1301 BACHARACH BLVD	ATLANTIC CITY, NJ	08401
1	142		1100 BOARDWALK	DGMB CASINO LLC	1133 BOARDWALK	ATLANTIC CITY, NJ	08401
1	142.01		1100 BOARDWALK	DGMB CASINO LLC	1133 BOARDWALK	ATLANTIC CITY, NJ	08401
56	14		137 S OCEAN AVE	DGMB CASINO, LLC	1133 BOARDWALK	ATLANTIC CITY, NJ	08401
56	15		139 S OCEAN AVE	DGMB CASINO, LLC	1133 BOARDWALK	ATLANTIC CITY, NJ	08401
56	20		147 S OCEAN AVE	DGMB CASINO, LLC	1133 BOARDWALK	ATLANTIC CITY, NJ	08401
56	21		161 S OCEAN AVE	DGMB CASINO, LLC	1133 BOARDWALK	ATLANTIC CITY, NJ	08401
56	22		163 S OCEAN AVE	DGMB CASINO, LLC	1133 BOARDWALK	ATLANTIC CITY, NJ	08401
56	23		165 S OCEAN AVE	DGMB CASINO, LLC	1133 BOARDWALK	ATLANTIC CITY, NJ	08401
56	24		167 S OCEAN AVE	DGMB CASINO, LLC	1133 BOARDWALK	ATLANTIC CITY, NJ	08401

BLOCK	LOT	QUAL	Location	Owner	Street Addrress	City\State	ZipCode
56	25		169 S OCEAN AVE	DGMB CASINO, LLC	1133 BOARDWALK	ATLANTIC CITY, NJ	08401
56	27		173 S OCEAN AVE	DGMB CASINO LLC	1133 BOARDWALK	ATLANTIC CITY, NJ	08401
56	29		177 S OCEAN AVE	DGMB CASINO, LLC	1133 BOARDWALK	ATLANTIC CITY, NJ	08401
56	30		179 S OCEAN AVE	DGMB CASINO, LLC	1133 BOARDWALK	ATLANTIC CITY, NJ	08401
56	31		181 S OCEAN AVE	DGMB CASINO, LLC	1133 BOARDWALK	ATLANTIC CITY, NJ	08401
56	38		124 S SOUTH CAROLINA AVE	DGMB CASINO, LLC	1133 BOARDWALK	ATLANTIC CITY, NJ	08401
56	48		122 S SOUTH CAROLINA AVE	DGMB CASINO LLC	1133 BOARDWALK	ATLANTIC CITY, NJ	08401
56	49		120 S SOUTH CAROLINA AVE	DGMB CASINO LLC	1133 BOARDWALK	ATLANTIC CITY, NJ	08401
56	50		112 S SOUTH CAROLINA AVE	DGMB CASINO, LLC	1133 BOARDWALK	ATLANTIC CITY, NJ	08401
57	9		149 S SOUTH CAROLINA AVE	DGMB CASINO, LLC	1133 BOARDWALK	ATLANTIC CITY, NJ	08401
58	7		138 S NORTH CAROLINA AVE	DGMB CASINO, LLC	1133 BOARDWALK	ATLANTIC CITY, NJ	08401
58	8		140 S NORTH CAROLINA AVE	DGMB CASINO, LLC	1133 BOARDWALK	ATLANTIC CITY, NJ	08401
58	9		152 S NORTH CAROLINA AVE	DGMB CASINO,LLC	1133 BOARDWALK	ATLANTIC CITY, NJ	08401
58	10		156 S NORTH CAROLINA AVE	DGMB CASINO, LLC	1133 BOARDWALK	ATLANTIC CITY, NJ	08401
58	11		157 S CHALFONTE AVE	DGMB CASINO, LLC	1133 BOARDWALK	ATLANTIC CITY, NJ	08401
59	1		1201 BOARDWALK	DGMB CASINO, LLC	1133 BOARDWALK	ATLANTIC CITY, NJ	08401
60	4		104 S PENNSYLVANIA AVE	DGMB CASINO, LLC	1133 BOARDWALK	ATLANTIC CITY, NJ	08401
60	5		110 S PENNSYLVANIA AVE	DGMB CASINO, LLC	1133 BOARDWALK	ATLANTIC CITY, NJ	08401
60	6		114 S PENNSYLVANIA AVE	DGMB CASINO, LLC	1133 BOARDWALK	ATLANTIC CITY, NJ	08401
60	7		118 S PENNSYLVANIA AVE	DGMB CASINO, LLC	1133 BOARDWALK	ATLANTIC CITY, NJ	08401
60	8		120 S PENNSYLVANIA AVE	DGMB CASINO, LLC	1133 BOARDWALK	ATLANTIC CITY, NJ	08401
60	9		134 S PENNSYLVANIA AVE	DGMB CASINO, LLC	1133 BOARDWALK	ATLANTIC CITY, NJ	08401
60	10		136 S PENNSYLVANIA AVE	DGMB CASINO, LLC	1133 BOARDWALK	ATLANTIC CITY, NJ	08401
60	11		138 S PENNSYLVANIA AVE	DGMB CASINO, LLC	1133 BOARDWALK	ATLANTIC CITY, NJ	08401

BLOCK	LOT	QUAL	Location	Owner	Street Addrress	City\State	ZipCode
60	12		152 S PENNSYLVANIA AVE	GROSS, M & BEACON TRUST COMPANY	163 MADISON AVE #600	MORRISTOWN, NJ	07960
60	13		158 S PENNSYLVANIA AVE	GROSS, M & FIRST FIDELITY BANK	1133 BOARDWALK	ATLANTIC CITY, NJ	08401
60	14		1121 BOARDWALK	DGMB CASINO, LLC	1133 BOARDWALK	ATLANTIC CITY, NJ	08401
60	15		1109 BOARDWALK	DGMB CASINO, LLC	1133 BOARDWALK	ATLANTIC CITY, NJ	08401
60	16		AIR RIGHTS NORTH CAROLINA	DGMB CASINO, LLC	1133 BOARDWALK	ATLANTIC CITY, NJ	08401
60	18		155 S NORTH CAROLINA AVE	GROSS, M & FIRST FIDELITY BANK	1133 BOARDWALK	ATLANTIC CITY, NJ	08401
60	19		MANSION AVE	DGMB CASINO, LLC	1133 BOARDWALK	ATLANTIC CITY, NJ	08401
60	20		153 S NORTH CAROLINA RR	DGMB CASINO, LLC	1133 BOARDWALK	ATLANTIC CITY, NJ	08401
60	21		153 S NORTH CAROLINA AVE	GROSS, M & FIRST FIDELITY BANK	1133 BOARDWALK	ATLANTIC CITY, NJ	08401
60	22		MANSION AVE	GROSS, M & FIRST FIDELITY BANK	1133 BOARDWALK	ATLANTIC CITY, NJ	08401
60	23		151 S NORTH CAROLINA AVE	FALCAR INC % RESORTS INTERNATIONAL	1133 BOARDWALK	ATLANTIC CITY, NJ	08401
60	24		MANSION AVE	FALCAR, INC % RESORTS INTERNATIONAL	1133 BOARDWALK	ATLANTIC CITY, NJ	08401
60	25		147 S NORTH CAROLINA AVE	GROSS, M & FIRST FIDELITY BANK	1133 BOARDWALK	ATLANTIC CITY, NJ	08401
60	26		147 S NORTH CAROLINA RR	GROSS, M & FIRST FIDELITY BANK	1133 BOARDWALK	ATLANTIC CITY, NJ	08401
60	27		158 S PENNSYLVANIA AVE RR	GROSS, M & FIRST FIDELITY BANK	1133 BOARDWALK	ATLANTIC CITY, NJ	08401
60	28		MANSION AVE	DGMB CASINO, LLC	1133 BOARDWALK	ATLANTIC CITY, NJ	08401
60	29		152 S PENNSYLVANIA AVE RR	GROSS, M & FIRST FIDELITY BANK	1133 BOARDWALK	ATLANTIC CITY, NJ	08401
60	30		145 S NORTH CAROLINA AVE	DGMB CASINO, LLC	1133 BOARDWALK	ATLANTIC CITY, NJ	08401
60	31		139 S NORTH CAROLINA AVE	DGMB CASINO, LLC	1133 BOARDWALK	ATLANTIC CITY, NJ	08401
60	32		135 S NORTH CAROLINA AVE	POPPYPHIL LLC	3 WEXFOOD LN	LINWOOD, NJ	08221
60	33		133 S NORTH CAROLINA AVE	DGMB CASINO, LLC	1133 BOARDWALK	ATLANTIC CITY, NJ	08401
60	34		127 S NORTH CAROLINA AVE	DGMB CASINO, LLC	1133 BOARDWALK	ATLANTIC CITY, NJ	08401
60	35		121 S NORTH CAROLINA AVE	DGMB CASINO, LLC	1133 BOARDWALK	ATLANTIC CITY, NJ	08401
60	36		115 S NORTH CAROLINA AVE	DGMB CASINO, LLC	1133 BOARDWALK	ATLANTIC CITY, NJ	08401

BLOCK	LOT	QUAL	Location	Owner	Street Addrress	City\State	ZipCode
60	37		109 S NORTH CAROLINA AVE	DGMB CASINO, LLC	1133 BOARDWALK	ATLANTIC CITY, NJ	08401
60	39.01		1137 BOARDWALK	DGMB CASINO, LLC	1133 BOARDWALK	ATLANTIC CITY, NJ	08401
60	39.02		1139 BOARDWALK	DGMB CASINO, LLC	1133 BOARDWALK	ATLANTIC CITY, NJ	08401

§

List of adjoining feature(s) that intersect 200 foot buffer from Subject Property.

Adjacent Properties (462)

BLOCK	LOT	QUAL	Location	Owner	Street Address	City\State	ZipCode
1	127		PUBLIC BEACH	CITY OF ATLANTIC CITY	1301 BACHARACH BLVD	ATLANTIC CITY, NJ	08401
1	128		PUBLIC BEACH	CITY OF ATLANTIC CITY	1301 BACHARACH BLVD	ATLANTIC CITY, NJ	08401
1	129		OCEAN AVE STREET END	CITY OF ATLANTIC CITY	1301 BACHARACH BLVD	ATLANTIC CITY, NJ	08401
1	130		PUBLIC BEACH	CITY OF ATLANTIC CITY	1301 BACHARACH BLVD	ATLANTIC CITY, NJ	08401
1	131		PUBLIC BEACH	CITY OF ATLANTIC CITY	1301 BACHARACH BLVD	ATLANTIC CITY, NJ	08401
1	132		SOUTH CAROLINA AVE STREET	CITY OF ATLANTIC CITY	1301 BACHARACH BLVD	ATLANTIC CITY, NJ	08401
1	133		PUBLIC BEACH	CITY OF ATLANTIC CITY	1301 BACHARACH BLVD	ATLANTIC CITY, NJ	08401
1	134		PUBLIC BEACH	CITY OF ATLANTIC CITY	1301 BACHARACH BLVD	ATLANTIC CITY, NJ	08401
1	135		PUBLIC BEACH	CITY OF ATLANTIC CITY	1301 BACHARACH BLVD	ATLANTIC CITY, NJ	08401
1	136		PUBLIC BEACH	CITY OF ATLANTIC CITY	1301 BACHARACH BLVD	ATLANTIC CITY, NJ	08401
1	137		PUBLIC BEACH	CITY OF ATLANTIC CITY	1301 BACHARACH BLVD	ATLANTIC CITY, NJ	08401
1	138		PUBLIC BEACH	CITY OF ATLANTIC CITY	1301 BACHARACH BLVD	ATLANTIC CITY, NJ	08401
1	139		NORTH CAROLINA AVE STREET	CITY OF ATLANTIC CITY	1301 BACHARACH BLVD	ATLANTIC CITY, NJ	08401
1	140		PUBLIC BEACH	CITY OF ATLANTIC CITY	1301 BACHARACH BLVD	ATLANTIC CITY, NJ	08401
1	141		MANSION AVE STREET END	CITY OF ATLANTIC CITY	1301 BACHARACH BLVD	ATLANTIC CITY, NJ	08401
1	142		1100 BOARDWALK	DGMB CASINO LLC	1133 BOARDWALK	ATLANTIC CITY, NJ	08401
1	142.01		1100 BOARDWALK	DGMB CASINO LLC	1133 BOARDWALK	ATLANTIC CITY, NJ	08401
1	143		PENNSYLVANIA AVE	CITY OF ATLANTIC CITY	1301 BACHARACH BLVD	ATLANTIC CITY, NJ	08401
1	144		PUBLIC BEACH	CITY OF ATLANTIC CITY	1301 BACHARACH BLVD	ATLANTIC CITY, NJ	08401

BLOCK	LOT	QUAL	Location	Owner	Street Address	City\State	ZipCode
53	10		144 S TENNESSEE AVE	TENNESSEE ATLANTIC QOZB LLC	29 UNION AVE	LAKEHURST, NJ	08733
53	14		1401 BOARDWALK	SCHIFF ENTERPRISES	1004 NEW RD	NORTHFIELD, NJ	08225
53	15		156 S TENNESSEE AVE	DAFNI AC LLC	16 GEORGETOWN CT	LINWOOD NJ	08221
53	16		148 S TENNESSEE AVE	MONOPOL C/0 CLIMAX FASHIONS INC	4 RUTH CT. GREAT NECK	NEW YORK, NY	11023
53	17		142 S TENNESSEE AVE	GREATER PITTSBURG LLC	25 N ALBANY AVE	ATLANTIC CITY, NJ	08401
53	18		140 S TENNESSEE AVE	COSTA CORP % G GEORGES	4 S NEWPORT AVE	VENTNOR, NJ	08406
53	19		138 S TENNESSEE AVE	COSTA CORP % G GEORGES	4 S NEWPORT AVE	VENTNOR, NJ	08406
53	20		136 S TENNESSEE AVE	COSTA CORP % G GEORGES	4 S NEWPORT AVE	VENTNOR NJ	08406
53	21		132 S TENNESSEE AVE	FRASER LTD	88 HUDSON AVE	IRVINGTON, NY	10533
53	22		130 S TENNESSEE AVE	FRASER LTD	88 HUDSON AVE	IRVINGTON, NY	10533
53	23		124 S TENNESSEE AVE	FRASER LTD	88 HUDSON AVE	IRVINGTON, NY	10533
54	1		1330 PACIFIC AVE	G&M ARSENIS, LLC	1339 PACIFIC AVE	ATLANTIC CITY, NJ	08401
54	5		109 S TENNESSEE AVE	M & G ARSENIS ETUX	1339 PACIFIC AVE	ATLANTIC CITY, NJ	08401
54	6		113 S TENNESSEE AVE	J & N PROPERTY MANAGEMENT, LLC	3540 ATLANTIC AVE	ATLANTIC CITY, NJ	08401
54	9		121 S TENNESSEE AVE	121 S TENN AVE LLC	29 UNION AVE	LAKEHURST, NJ	08733
54	10		127 S TENNESSEE AVE	129 TENN AVE REALTY LLC	29 UNION AVE	LAKEHURST, NJ	08733
54	12		131 S TENNESSEE AVE	131 S TENN AVE LLC	29 UNION AVE	LAKEHURST, NJ	08733
54	13		133 S TENNESSEE AVE	133 S TENN AVE LLC	29 UNION AVE	LAKEHURST, NJ	08733
54	15		147 S TENNESSEE AVE	147 S TENNESSEE LLC	29 UNION AVE	LAKEHURST, NJ	08733
54	16		155 S TENNESSEE AVE	155 S TENNESSEE QOZB LLC	13 DELRAY LN	ABSECON, NJ	08201.3005
54	17		159 S TENNESSEE AVE	161 S TENNESSEE LLC	PO BOX 1106	ATLANTIC CITY, NJ	08404
54	18		161 S TENNESSEE AVE	161 S TENNESSEE LLC	PO BOX 1106	ATLANTIC CITY NJ	08404
54	19		167 S TENNESSEE AVE	167 S TENNESSEE LLC	613 MELROSE AVE	ATLANTIC CITY, NJ	08401
54	20		171 S TENNESSEE AVE	SCANLON BNB LLC	523 S 2ND AVE	GALLOWAY, NJ	08205.9525
54	21		175 S TENNESSEE AVE	FELDMAN, ROBYN & ROBYN E KANE	1410 ACADEMY LN	ELKINS PARK, PA	19027

BLOCK	LOT	QUAL	Location	Owner	Street Address	City\State	ZipCode
54	22		181 S TENNESSEE AVE	KANE, JOYCE L	175 TENNESSEE AVE	ATLANTIC CITY, NJ	08401
54	23		187 S TENNESSEE AVE	FELDMAN, ROBYN & ROBYN E KANE	1410 ACADEMY LN	ELKINS PARK, PA	19027
54	24		193 S TENNESSEE AVE	AUM AV LLC	175 S TENNESSEE AVE	ATLANTIC CITY, NJ	08401
54	25		195 S TENNESSEE AVE	AUM AV LLC	175 S TENNESSEE AVE	ATLANTIC CITY, NJ	08401
54	26		209 S TENNESSEE AVE	209 S TENNESSEE LLC	613 MELROSE AVE	ATLANTIC CITY, NJ	08401
54	27		215 S TENNESSEE AVE	CALLAZZO PROPERTIES LLC	29 UNION AVE	LAKEHURST, NJ	08733
54	28		219 S TENNESSEE AVE	DGMB CASINO LLC	1133 BOARDWALK	ATLANTIC CITY, NJ	08401
54	29		223 S TENNESSEE AVE	DGMB CASINO LLC	1133 BOARDWALK	ATLANTIC CITY, NJ	08401
54	30		229 S TENNESSEE AVE	RUSSELL, DAVID R	1003 ATSION RD	SHAMONG, NJ	08088
54	31		170 S OCEAN AVE	DGMB CASINO LLC	1133 BOARDWALK	ATLANTIC CITY, NJ	08401
54	32		168 S OCEAN AVE	DGMB CASINO LLC	1133 BOARDWALK	ATLANTIC CITY, NJ	08401
54	33		162 S OCEAN AVE	DGMG CASINO, LLC	1133 BOARDWALK	ATLANTIC CITY, NJ	08401
54	34		160 S OCEAN AVE	AUM AV, LLC	410 ROUTE 46 WEST	HACKENSACK, NJ	07601
54	35		158 S OCEAN AVE	FELDMAN, ROBYN & ROBYN E KANE	1410 ACADEMY LN	ELKINS PARK, PA	19027
54	36		154 S OCEAN AVE	FELDMAN, ROBYN & ROBYN E KANE	1410 ACADEMY LN	ELKINS PARK, PA	19027
54	37		150 S OCEAN AVE	FELDMAN, ROBYN & ROBYN E KANE	1410 ACADEMY LN	ELKINS PARK, PA	19027
54	38		142 S OCEAN AVE	FELDMAN, ROBYN & ROBYN E KANE	1410 ACADEMY LN	ELKINS PARK, PA	19027
54	39		140 S OCEAN AVE	FELDMAN, ROBYN & ROBYN E KANE	1410 ACADEMY LN	ELKINS PARK, PA	19027
54	40		138 S OCEAN AVE	AUM AV, LLC	410 ROUTE 46 WEST	SOUTH HACKENSACK, NJ	07606
54	41		136 S OCEAN AVE RR	AUM AV, LLC	410 ROUTE 46 WEST	SOUTH HACKENSACK, NJ	07606
54	42		136 S OCEAN AVE	KWART, KURT	5006 WELLINGTON AVE #2112	VENTNOR, NJ	08406
54	43		S OCEAN AVE	KWART, KURT	5006 WELLINGTON AVE #2112	VENTNOR, NJ	08406
54	44		134 S OCEAN AVE	TENNESSEE ATLANTIC QOZB LLC	29 UNION AVE	LAKEHURST, NJ	08733
54	46		132 S OCEAN AVE	OCEAN OZ CAPITAL LLC	2043 E FLETCHER ST	PHILADELPHIA, PA	19125
54	47		130 S OCEAN AVE	SEA SUITE CAPITAL II LLC	2043 E FLETCHER ST	PHILADELPHIA, PA	19125
54	48		128 S OCEAN AVE	ORANGE LOOP PROP LLC	125 N DERBY AVE	VENTNOR, NJ	08406

BLOCK	LOT	QUAL	Location	Owner	Street Address	City\State	ZipCode
54	49		126 S OCEAN AVE	ORANGE LOOP PROPERTY LLC	5006 WELLINGTON AVE 2122	VENTNOR, NJ	08406
54	50		124 S OCEAN AVE	EGG HARBOR HOMES LLC	1846 REED ST	PHILADLEPHIA, PA	19146
54	51		122 S OCEAN AVE	SEA SUITE CAPITAL LLC	2043 E FLETCHER ST	PHILADELPHIA, PA	19125
54	52		120 S OCEAN AVE	BROWN, NICHOLAS K & PIZZUTO, WILLIA	43 FAIRWAY AVE	NORTHFIELD, NJ	08225
54	53		118 S OCEAN AVE	ALAM, ISFAQUAL	97-17 31ST ST	ELMHURST, NY	11369
54	54		116 S OCEAN AVE	129 TENN AVE REALTY LLC	29 UNION AVE	LAKEHURST, NJ	08733
54	56		114 S OCEAN AVE	129 TENN AVE REALTY LLC	29 UNION AVE	LAKEHURST, NJ	08733
54	57		112 S OCEAN AVE	SEA SUITE CAPITAL II LLC	2043 E FLETCHER ST	PHILADELPHIA, PA	19125
54	58		110 S OCEAN AVE	SEA SUITE CAPITAL II LLC	2043 E FLETCHER ST	PHILADELPHIA, PA	19125
54	59		108 S OCEAN AVE	J2MN LLC & SCOTT, WILLIAM J,-JR	108 S OCEAN AVE	ATLANTIC CITY, NJ	08401
54	60		106 S OCEAN AVE	106 S OCEAN LLC	226 WOODWARD AVE	RUTHERFORD, NJ	07070
54	61		104 S OCEAN AVE	HDHR INC	PO BOX 1241	PLEASANTVILLE, NJ	08232
54	62		102 S OCEAN AVE	102 S OCEAN LLC	226 WOODWARD AVE	RUTHERFORD, NJ	07070
54	63		1318 PACIFIC AVE	1318 PACIFIC AVENUE LLC	18 S 31ST AVE	LONGPORT, NJ	08403
54	64		1322-1324 PACIFIC AVE	ARSENIS PROPERTIES LLC	17 RIDGEWOOD CT	NORTHFIELD, NJ	08225
55	1		1325 BOARDWALK	BOARDWALK INVESTMENT PROP %HELLER	120 BROADWAY #300	SANTA MONICA, CA	90401.2386
56	1		1316 PACIFIC AVE	NEW YORK'S FINEST LLC	306 N DOUGLAS AVE	MARGATE, NJ	08402
56	2		1314 PACIFIC AVE	NEW YORK'S FINEST LLC	306 DOUGLAS AVE	MARGATE, NJ	08402
56	3		107 S OCEAN AVE	SO CAROLINA & PACIFIC LLC %JACOBSON	274 MATTIX RUN	GALLOWAY, NJ	08205
56	4		111 S OCEAN AVE	111 S OCEAN LLC	226 WOODWARD AVE	RUTHERFORD, NJ	07070
56	5		113 S OCEAN AVE	DGMB CASINO, LLC	1133 BOARDWALK	ATLANTIC CITY, NJ	08401
56	6		115 S OCEAN AVE	LIBERTY HUDSON OPPORTUNITY ZONE FU	226 WOODWARD AVE	RUTHERFORD, NJ	07070
56	7		127 S OCEAN AVE	OCEAN HOUSE INC %MARTIN BERLOW	127 S OCEAN AVE	ATLANTIC CITY N J	08401
56	8		131 S OCEAN AVE	OCEAN HOUSE INC	127 S OCEAN AVE	ATLANTIC CITY, NJ	08401
56	9		131 S OCEAN AVE RR	PERALTA, ALEX N.	131 1/2 S OCEAN AVENUE	ATLANTIC CITY, NJ	08401
56	10		OCEAN AVE	CITY OF ATLANTIC CITY	BACHARACH BLVD	ATLANTIC CITY N J	08401
56	11		133 S OCEAN AVE	AUM AV, LLC	410 ROUTE 46 WEST	HACKENSACK, NJ	07601
56	12		135 S OCEAN AVE	BEGUM, FERDAUS A	135 S OCEAN AVE	ATLANTIC CITY, NJ	08401

BLOCK	LOT	QUAL	Location	Owner	Street Address	City\State	ZipCode
56	13		135 S OCEAN AVE RR	1355 S OCEAN LLC	226 WOODWARD AVE	RUTHERFORD, NJ	07070
56	14		137 S OCEAN AVE	DGMB CASINO, LLC	1133 BOARDWALK	ATLANTIC CITY, NJ	08401
56	15		139 S OCEAN AVE	DGMB CASINO, LLC	1133 BOARDWALK	ATLANTIC CITY, NJ	08401
56	16		141 S OCEAN AVE	ST JAMES PARTNERSHIP	5702 VENTNOR AVE	VENTNOR, NJ	08406
56	17		143 S OCEAN AVE	INGRAM, MARY	143 S OCEAN AVE	ATLANTIC CITY, N J	08401
56	18		151 S OCEAN AVE	BERGEN;WILLIAM INGRAM;MARY ET AL	151 S OCEAN AVE	ATLANTIC CITY, NJ	08401
56	19		145 S OCEAN AVE	145 S OCEAN LLC	145 OCEAN AVE	ATLANTIC CITY, NJ	08401
56	20		147 S OCEAN AVE	DGMB CASINO, LLC	1133 BOARDWALK	ATLANTIC CITY, NJ	08401
56	21		161 S OCEAN AVE	DGMB CASINO, LLC	1133 BOARDWALK	ATLANTIC CITY, NJ	08401
56	22		163 S OCEAN AVE	DGMB CASINO, LLC	1133 BOARDWALK	ATLANTIC CITY, NJ	08401
56	23		165 S OCEAN AVE	DGMB CASINO, LLC	1133 BOARDWALK	ATLANTIC CITY, NJ	08401
56	24		167 S OCEAN AVE	DGMB CASINO, LLC	1133 BOARDWALK	ATLANTIC CITY, NJ	08401
56	25		169 S OCEAN AVE	DGMB CASINO, LLC	1133 BOARDWALK	ATLANTIC CITY, NJ	08401
56	26		171 S OCEAN AVE	LIBERTY HUDSON OPPORTUNITY ZONE FU	226 WOODWARD AVE	RUTHERFORD, NJ	07070
56	27		173 S OCEAN AVE	DGMB CASINO LLC	1133 BOARDWALK	ATLANTIC CITY, NJ	08401
56	28		175 S OCEAN AVE	BOARDWALK INVESTMENT PROPERTIES LLC	120 BROADWAY SUITE 300	SANTA MONICA, CALIFORNIA	90401
56	29		177 S OCEAN AVE	DGMB CASINO, LLC	1133 BOARDWALK	ATLANTIC CITY, NJ	08401
56	30		179 S OCEAN AVE	DGMB CASINO, LLC	1133 BOARDWALK	ATLANTIC CITY, NJ	08401
56	31		181 S OCEAN AVE	DGMB CASINO, LLC	1133 BOARDWALK	ATLANTIC CITY, NJ	08401
56	32		183 S OCEAN AVE	GEORGES, CONSTANTINE	4 S NEWPORT AVE	VENTNOR, NJ	08406
56	33		1315 BOARDWALK	GREENLANDS REALTY LLC	27 WEST THIRD ST	MEDIA, PA	19063
56	34		1301 BOARDWALK	SCHIFF, A & R SCHIFF	1004 NEW ROAD	NORTHFIELD, NJ	08225
56	35		182 S SOUTH CAROLINA AVE	SCHIFF ENTERPRISE	1004 NEW ROAD	NORTHFIELD, NJ	08225
56	36		180 S SOUTH CAROLINA AVE	SCHIFF ENTERPRISES	1004 NEW ROAD	NORTHFIELD, NJ	08225
56	37		178 S SOUTH CAROLINA AVE	SCHIFF ENTERPRISES	1004 NEW ROAD	NORTHFIELD, NJ	08225
56	38		124 S SOUTH CAROLINA AVE	DGMB CASINO, LLC	1133 BOARDWALK	ATLANTIC CITY, NJ	08401
56	48		122 S SOUTH CAROLINA AVE	DGMB CASINO LLC	1133 BOARDWALK	ATLANTIC CITY, NJ	08401
56	49		120 S SOUTH CAROLINA AVE	DGMB CASINO LLC	1133 BOARDWALK	ATLANTIC CITY, NJ	08401
56	50		112 S SOUTH CAROLINA AVE	DGMB CASINO, LLC	1133 BOARDWALK	ATLANTIC CITY, NJ	08401
56	54		110 S SOUTH CAROLINA AVE	LIBERTY HUDSON OPPORTUNITY ZONE FU	226 WOODWARD AVE	RUTHERFORD, NJ	07070
56	55		108 S SOUTH CAROLINA AVE	JMS IRA LLC	1599 HAMBURG TURNPIKE	WAYNE, NJ	07470

BLOCK	LOT	QUAL	Location	Owner	Street Address	City\State	ZipCode
56	56		108 S SOUTH CAROLINA RR	JMS IRA LLC	1599 HAMBURG TURNPIKE	WAYNE, NJ	07470
56	57		106 S SOUTH CAROLINA AVE	111 S OCEAN LLC	226 WOODWARD AVE	RUTHERFORD, NJ	07070
56	58		104 S SOUTH CAROLINA AVE	SO CAROLINA & PACIFIC LLC %JACOBSON	274 MATTIX RUN	GALLOWAY, NJ	08205
56	59		102 S SOUTH CAROLINA AVE	SO CAROLINA & PACIFIC LLC %JACOBSON	274 MATTIX RUN	GALLOWAY, NJ	08205
56	60		1308 PACIFIC AVE	SO CAROLINA & PACIFIC LLC %JACOBSON	274 MATTIX RUN	GALLOWAY, NJ	08205
56	61		1300 PACIFIC AVE	SO CAROLINA & PACIFIC LLC%JACOBSON	274 MATTIX RUN	GALLOWAY, NJ	08205
57	1		1212 PACIFIC AVE	GRAND PRIX ATLANTIC C/0 HEMA GANDHI	545 E JOHNCARPENTER #1400	IRVING, TX	75062
57	6		143 S SOUTH CAROLINA AVE	FIRST, KNIGHT INV LLC	143 S SOUTH CAROLINA AVE	ATLANTIC CITY, NJ	08401
57	7		145 S SOUTH CAROLINA AVE	143 CAROLINA LLC	613 MELROSE AVE	ATLANTIC CITY, NJ	08401
57	8		147 S SOUTH CAROLINA AVE	143 CAROLINA LLC	613 MELROSE AVE	ATLANTIC CITY, NJ	08401
57	9		149 S SOUTH CAROLINA AVE	DGMB CASINO, LLC	1133 BOARDWALK	ATLANTIC CITY, NJ	08401
57	24		1210 PACIFIC AVE	1212 CHALFONTE LLC	1219 PACIFIC AVE	ATLANTIC CITY, NJ	08401
58	1		100 S NORTH CAROLINA AVE	FAIRFIELD ATLANTIC CITY SKYLINE	100 S NORTH CAROLINA AVE	ATLANTIC CITY, NJ	08401
58	1	C0001	100 S NORTH CAROLINA C1	FAIRFIELD ATLANTIC CITY	100 S NORTH CAROLINA AVE	ATLANTIC CITY, NJ	08401
58	1	C0002	100 S NORTH CAROLINA C2	FAIRFIELD ATLANTIC CITY	100 S NORTH CAROLINA AVE	ATLANTIC CITY, NJ	08401
58	1	C0003	100 S NORTH CAROLINA C3	FAIRFIELD ATLANTIC CITY	100 S NORTH CAROLINA	ATLANTIC CITY, NJ	08401
58	1	C0004	100 S NORTH CAROLINA C4	FAIRFIELD ATLANTIC CITY	100 S NORTH CAROLINA AVE	ATLANTIC CITY, NJ	08401
58	1	C0005	100 S NORTH CAROLINA C5	FAIRFIELD ATLANTIC CITY	100 S NORTH CAROLINA AVE	ATLANTIC CITY, NJ	08401
58	1	C0006	100 S NORTH CAROLINA C6	FAIRFIELD ATLANTIC CITY	100 S NORTH CAROLINA AVE	ATLANTIC CITY, NJ	08401
58	1	C0007	100 S NORTH CAROLINA C7	FAIRFIELD ATLANTIC CITY	100 S NORTH CAROLINA AVE	ATLANTIC CITY, NJ	08401
58	1	C0008	100 S NORTH CAROLINA C8	FAIRFIELD ATLANTIC CITY	100 S NORTH CAROLINA AVE	ATLANTIC CITY, NJ	08401
58	1	C0009	100 S NORTH CAROLINA C9	FAIRFIELD ATLANTIC CITY	100 S NORTH CAROLINA AVE	ATLANTIC CITY, NJ	08401
58	1	C0010	100 S NORTH CAROLINA C10	FAIRFIELD ATLANTIC CITY	100 S NORTH CAROLINA AVE	ATLANTIC CITY, NJ	08401
58	1	C0011	100 S NORTH CAROLINA C11	FAIRFIELD ATLANTIC CITY	100 S NORTH CAROLINA AVE	ATLANTIC CITY, NJ	08401

BLOCK	LOT	QUAL	Location	Owner	Street Address	City\State	ZipCode
58	1	C0012	100 S NORTH CAROLINA C12	FAIRFIELD ATLANTIC CITY	100 S NORTH CAROLINA AVE	ATLANTIC CITY, NJ	08401
58	1	C0013	100 S NORTH CAROLINA C13	FAIRFIELD ATLANTIC CITY	100 S NORTH CAROLINA AVE	ATLANTIC CITY, NJ	08401
58	1	C0014	100 S NORTH CAROLINA C14	FAIRFIELD ATLANTIC CITY	100 S NORTH CAROLINA AVE	ATLANTIC CITY, NJ	08401
58	1	C0015	100 S NORTH CAROLINA C15	FAIRFIELD ATLANTIC CITY	100 S NORTH CAROLINA AVE	ATLANTIC CITY, NJ	08401
58	1	C0016	100 S NORTH CAROLINA C16	FAIRFIELD ATLANTIC CITY	100 S NORTH CAROLINA AVE	ATLANTIC CITY, NJ	08401
58	1	C0017	100 S NORTH CAROLINA C17	FAIRFIELD ATLANTIC CITY	100 S NORTH CAROLINA AVE	ATLANTIC CITY, NJ	08401
58	1	C0018	100 S NORTH CAROLINA C18	FAIRFIELD ATLANTIC CITY	100 S NORTH CAROLINA AVE	ATLANTIC CITY, NJ	08401
58	1	C0019	100 S NORTH CAROLINA C19	FAIRFIELD ATLANTIC CITY	100 S NORTH CAROLINA AVE	ATLANTIC CITY, NJ	08401
58	1	C0020	100 S NORTH CAROLINA C20	FAIRFIELD ATLANTIC CITY	100 S NORTH CAROLINA AVE	ATLANTIC CITY, NJ	08401
58	1	C0701	100 S NORTH CAROLINA 701	FAIRFIELD ATLANTIC CITY	100 S NORTH CAROLINA AVE	ATLANTIC CITY, NJ	08401
58	1	C0702	100 S NORTH CAROLINA 702	FAIRFIELD ATLANTIC CITY	100 S NORTH CAROLINA AVE	ATLANTIC CITY , NJ	08401
58	1	C0703	100 S NORTH CAROLINA 703	FAIRFIELD ATLANTIC CITY	100 S NORTH CAROLINA AVE	ATLANTIC CITY, NJ	08401
58	1	C0704	100 S NORTH CAROLINA 704	FAIRFIELD ATLANTIC CITY	100 S NORTH CAROLINA AVE	ATLANTIC CITY, NJ	08401
58	1	C0705	100 S NORTH CAROLINA 705	FAIRFIELD ATLANTIC CITY	100 S NORTH CAROLINA AVE	ATLANTIC CITY, NJ	08401
58	1	C0706	100 S NORTH CAROLINA 706	FAIRFIELD ATLANTIC CITY	100 S NORTH CAROLINA AVE	ATLANTIC CITY, NJ	08401
58	1	C0707	100 S NORTH CAROLINA 707	FAIRFIELD ATLANTIC CITY	100 S NORTH CAROLINA AVE	ATLANTIC CITY, NJ	08401
58	1	C0708	100 S NORTH CAROLINA 708	FAIRFIELD ATLANTIC CITY	100 S NORTH CAROLINA AVE	ATLANTIC CITY, NJ	08401
58	1	C0709	100 S NORTH CAROLINA 709	FAIRFIELD ATLANTIC CITY	100 S NORTH CAROLINA AVE	ATLANTIC CITY, NJ	08401
58	1	C0710	100 S NORTH CAROLINA 710	FAIRFIELD ATLANTIC CITY	100 S NORTH CAROLINA AVE	ATLANTIC CITY, NJ	08401
58	1	C0711	100 S NORTH CAROLINA 711	FAIRFIELD ATLANTIC CITY	100 S NORTH CAROLINA AVE	ATLANTIC CITY, NJ	08401
58	1	C0712	100 S NORTH CAROLINA 712	FAIRFIELD ATLANTIC CITY	100 S NORTH CAROLINA AVE	ATLANTIC CITY, NJ	08401
58	1	C0801	100 S NORTH CAROLINA 801	FAIRFIELD ATLANTIC CITY	100 S NORTH CAROLINA AVE	ATLANTIC CITY, NJ	08401
58	1	C0802	100 S NORTH CAROLINA 802	FAIRFIELD ATLANTIC CITY	100 S NORTH CAROLINA AVE	ATLANTIC CITY, NJ08401	32819
58	1	C0803	100 S NORTH CAROLINA 803	FAIRFIELD ATLANTIC CITY	100 S NORTH CAROLINA AVE	ATLANTIC CITY, NJ	08401

BLOCK	LOT	QUAL	Location	Owner	Street Address	City\State	ZipCode
58	1	C0804	100 S NORTH CAROLINA 804	FAIRFIELD ATLANTIC CITY	100 S NORTH CAROLINA AVE	ATLANTIC CITY, NJ	08401
58	1	C0805	100 S NORTH CAROLINA 805	FAIRFIELD ATLANTIC CITY	100 S NORTH CAROLINA AVE	ATLANTIC CITY, NJ	08401
58	1	C0806	100 S NORTH CAROLINA 806	FAIRFIELD ATLANTIC CITY	100 S NORTH CAROLINA AVE	ATLANTIC CITY, NJ	08401
58	1	C0807	100 S NORTH CAROLINA 807	FAIRFIELD ATLANTIC CITY	100 S NORTH CAROLINA AVE	ATLANTIC CITY, NJ	08401
58	1	C0808	100 S NORTH CAROLINA 808	FAIRFIELD ATLANTIC CITY	100 S NORTH CAROLINA AVE	ATLANTIC CITY, NJ	08401
58	1	C0809	100 S NORTH CAROLINA 809	FAIRFIELD ATLANTIC CITY	100 S NORTH CAROLINA AVE	ATLANTIC CITY, NJ	08401
58	1	C0810	100 S NORTH CAROLINA 810	FAIRFIELD ATLANTIC CITY	100 S NORTH CAROLINA AVE	ATLANTIC CITY, NJ	08401
58	1	C0811	100 S NORTH CAROLINA 811	FAIRFIELD ATLANTIC CITY	100 S NORTH CAROLINA AVE	ATLANTIC CITY, NJ	08401
58	1	C0812	100 S NORTH CAROLINA 812	FAIRFIELD ATLANTIC CITY	100 S NORTH CAROLINA AVE	ATLANTIC CITY, NJ	08401
58	1	C0901	100 S NORTH CAROLINA 901	FAIRFIELD ATLANTIC CITY	100 S NORTH CAROLINA AVE	ATLANTIC CITY, NJ	08401
58	1	C0902	100 S NORTH CAROLINA 902	FAIRFIELD ATLANTIC CITY	100 S NORTH CAROLINA AVE	ATLANTIC CITY, NJ	08401
58	1	C0903	100 S NORTH CAROLINA 903	FAIRFIELD ATLANTIC CITY	100 S NORTH CAROLINA AVE	ATLANTIC CITY, NJ	08401
58	1	C0904	100 S NORTH CAROLINA 904	FAIRFIELD ATLANTIC CITY	100 S NORTH CAROLINA AVE	ATLANTIC CITY, NJ	08401
58	1	C0905	100 S NORTH CAROLINA 905	FAIRFIELD ATLANTIC CITY	100 S NORTH CAROLINA AVE	ATLANTIC CITY, NJ	08401
58	1	C0906	100 S NORTH CAROLINA 906	FAIRFIELD ATLANTIC CITY	100 S NORTH CAROLINA AVE	ATLANTIC CITY, NJ	08401
58	1	C0907	100 S NORTH CAROLINA 907	FAIRFIELD ATLANTIC CITY	100 S NORTH CAROLINA AVE	ATLANTIC CITY, NJ	08401
58	1	C0908	100 S NORTH CAROLINA 908	FAIRFIELD ATLANTIC CITY	100 S NORTH CAROLINA AVE	ATLANTIC CITY, NJ	08401
58	1	C0909	100 S NORTH CAROLINA 909	FAIRFIELD ATLANTIC CITY	100 S NORTH CAROLINA AVE	ATLANTIC CITY, NJ	08401
58	1	C0910	100 S NORTH CAROLINA 910	FAIRFIELD ATLANTIC CITY	100 S NORTH CAROLINA AVE	ATLANTIC CITY, NJ	08401
58	1	C0911	100 S NORTH CAROLINA 911	FAIRFIELD ATLANTIC CITY	100 S NORTH CAROLINA AVE	ATLANTIC CITY, NJ	08401
58	1	C0912	100 S NORTH CAROLINA 912	FAIRFIELD ATLANTIC CITY	100 S NORTH CAROLINA AVE	ATLANTIC CITY, NJ	08401
58	1	C1001	100 S NORTH CAROLINA 1001	FAIRFIELD ATLANTIC CITY	100 S NORTH CAROLINA AVE	ATLANTIC CITY, NJ	08401
58	1	C1002	100 S NORTH CAROLINA 1002	FAIRFIELD ATLANTIC CITY	100 S NORTH CAROLINA AVE	ATLANTIC CITY, NJ	08401
58	1	C1003	100 S NORTH CAROLINA 1003	FAIRFIELD ATLANTIC CITY	100 S NORTH CAROLINA AVE	ATLANTIC CITY, NJ	08401

BLOCK	LOT	QUAL	Location	Owner	Street Address	City\State	ZipCode
58	1	C1004	100 S NORTH CAROLINA 1004	FAIRFIELD ATLANTIC CITY	100 S NORTH CAROLINA AVE	ATLANTIC CITY, NJ	08401
58	1	C1005	100 S NORTH CAROLINA 1005	FAIRFIELD ATLANTIC CITY	100 S NORTH CAROLINA AVE	ATLANTIC CITY, NJ	08401
58	1	C1006	100 S NORTH CAROLINA 1006	FAIRFIELD ATLANTIC CITY	100 S NORTH CAROLINA AVE	ATLANTIC CITY, NJ	08401
58	1	C1007	100 S NORTH CAROLINA 1007	FAIRFIELD ATLANTIC CITY	100 S NORTH CAROLINA AVE	ATLANTIC CITY, NJ	08401
58	1	C1008	100 S NORTH CAROLINA 1008	FAIRFIELD ATLANTIC CITY	100 S NORTH CAROLINA AVE	ATLANTIC CITY, NJ	08401
58	1	C1009	100 S NORTH CAROLINA 1009	FAIRFIELD ATLANTIC CITY	100 S NORTH CAROLINA AVE	ATLANTIC CITY, NJ	08401
58	1	C1010	100 S NORTH CAROLINA 1010	FAIRFIELD ATLANTIC CITY	100 S NORTH CAROLINA AVE	ATLANTIC CITY, NJ	08401
58	1	C1011	100 S NORTH CAROLINA 1011	FAIRFIELD ATLANTIC CITY	100 S NORTH CAROLINA AVE	ATLANTIC CITY, NJ	08401
58	1	C1012	100 S NORTH CAROLINA 1012	FAIRFIELD ATLANTIC CITY	100 S NORTH CAROLINA AVE	ATLANTIC CITY, NJ	08401
58	1	C1101	100 S NORTH CAROLINA 1101	FAIRFIELD ATLANTIC CITY	100 S NORTH CAROLINA AVE	ATLANTIC CITY, NJ	08401
58	1	C1102	100 S NORTH CAROLINA 1102	FAIRFIELD ATLANTIC CITY	100 S NORTH CAROLINA AVE	ATLANTIC CITY, NJ	08401
58	1	C1103	100 S NORTH CAROLINA 1103	FAIRFIELD ATLANTIC CITY	100 S NORTH CAROLINA AVE	ATLANTIC CITY, NJ	08401
58	1	C1104	100 S NORTH CAROLINA 1104	FAIRFIELD ATLANTIC CITY	100 S NORTH CAROLINA AVE	ATLANTIC CITY, NJ	08401
58	1	C1105	100 S NORTH CAROLINA 1105	FAIRFIELD ATLANTIC CITY	100 S NORTH CAROLINA AVE	ATLANTIC CITY, NJ	08401
58	1	C1106	100 S NORTH CAROLINA 1106	FAIRFIELD ATLANTIC CITY	100 S NORTH CAROLINA AVE	ATLANTIC CITY, NJ	08401
58	1	C1107	100 S NORTH CAROLINA 1107	FAIRFIELD ATLANTIC CITY	100 S NORTH CAROLINA AVE	ATLANTIC CITY, NJ	08401
58	1	C1108	100 S NORTH CAROLINA 1108	FAIRFIELD ATLANTIC CITY	100 S NORTH CAROLINA AVE	ATLANTIC CITY, NJ	08401
58	1	C1109	100 S NORTH CAROLINA 1109	FAIRFIELD ATLANTIC CITY	100 S NORTH CAROLINA AVE	ATLANTIC CITY, NJ	08401
58	1	C1110	100 S NORTH CAROLINA 1110	FAIRFIELD ATLANTIC CITY	100 S NORTH CAROLINA AVE	ATLANTIC CITY, NJ	08401
58	1	C1111	100 S NORTH CAROLINA 1111	FAIRFIELD ATLANTIC CITY	100 S NORTH CAROLINA AVE	ATLANTIC CITY, NJ	08401
58	1	C1112	100 S NORTH CAROLINA 1112	FAIRFIELD ATLANTIC CITY	100 S NORTH CAROLINA AVE	ATLANTIC CITY, NJ	08401
58	1	C1201	100 S NORTH CAROLINA 1201	FAIRFIELD ATLANTIC CITY	100 S NORTH CAROLINA AVE	ATLANTIC CITY, NJ	08401
58	1	C1202	100 S NORTH CAROLINA 1202	FAIRFIELD ATLANTIC CITY	100 S NORTH CAROLINA AVE	ATLANTIC CITY, NJ	08401
58	1	C1203	100 S NORTH CAROLINA 1203	FAIRFIELD ATLANTIC CITY	100 S NORTH CAROLINA AVE	ATLANTIC CITY, NJ	08401

BLOCK	LOT	QUAL	Location	Owner	Street Address	City\State	ZipCode
58	1	C1204	100 S NORTH CAROLINA 1204	FAIRFIELD ATLANTIC CITY	100 S NORTH CAROLINA AVE	ATLANTIC CITY, NJ	08401
58	1	C1205	100 S NORTH CAROLINA 1205	FAIRFIELD ATLANTIC CITY	100 S NORTH CAROLINA AVE	ATLANTIC CITY, NJ	08401
58	1	C1206	100 S NORTH CAROLINA 1206	FAIRFIELD ATLANTIC CITY	100 S NORTH CAROLINA AVE	ATLANTIC CITY, NJ	08401
58	1	C1207	100 S NORTH CAROLINA 1207	FAIRFIELD ATLANTIC CITY	100 S NORTH CAROLINA AVE	ATLANTIC CITY, NJ	08401
58	1	C1208	100 S NORTH CAROLINA 1208	FAIRFIELD ATLANTIC CITY	100 S NORTH CAROLINA AVE	ATLANTIC CITY, NJ	08401
58	1	C1209	100 S NORTH CAROLINA 1209	FAIRFIELD ATLANTIC CITY	100 S NORTH CAROLINA AVE	ATLANTIC CITY, NJ	08401
58	1	C1210	100 S NORTH CAROLINA 1210	FAIRFIELD ATLANTIC CITY	100 S NORTH CAROLINA AVE	ATLANTIC CITY, NJ	08401
58	1	C1211	100 S NORTH CAROLINA 1211	FAIRFIELD ATLANTIC CITY	100 S NORTH CAROLINA AVE	ATLANTIC CITY, NJ	08401
58	1	C1212	100 S NORTH CAROLINA 1212	FAIRFIELD ATLANTIC CITY	100 S NORTH CAROLINA AVE	ATLANTIC CITY, NJ	08401
58	1	C1401	100 S NORTH CAROLINA 1401	FAIRFIELD ATLANTIC CITY	100 S NORTH CAROLINA AVE	ATLANTIC CITY, NJ	08401
58	1	C1402	100 S NORTH CAROLINA 1402	FAIRFIELD ATLANTIC CITY	100 S NORTH CAROLINA AVE	ATLANTIC CITY, NJ	08401
58	1	C1403	100 S NORTH CAROLINA 1403	FAIRFIELD ATLANTIC CITY	100 S NORTH CAROLINA AVE	ATLANTIC CITY, NJ	08401
58	1	C1404	100 S NORTH CAROLINA 1404	FAIRFIELD ATLANTIC CITY	100 S NORTH CAROLINA AVE	ATLANTIC CITY, NJ	08401
58	1	C1405	100 S NORTH CAROLINA 1405	FAIRFIELD ATLANTIC CITY	100 S NORTH CAROLINA AVE	ATLANTIC CITY, NJ	08401
58	1	C1406	100 S NORTH CAROLINA 1406	FAIRFIELD ATLANTIC CITY	100 S NORTH CAROLINA AVE	ATLANTIC CITY, NJ	08401
58	1	C1407	100 S NORTH CAROLINA 1407	FAIRFIELD ATLANTIC CITY	100 S NORTH CAROLINA AVE	ATLANTIC CITY, NJ	08401
58	1	C1408	100 S NORTH CAROLINA 1408	FAIRFIELD ATLANTIC CITY	100 S NORTH CAROLINA AVE	ATLANTIC CITY, NJ	08401
58	1	C1409	100 S NORTH CAROLINA 1409	FAIRFIELD ATLANTIC CITY	100 S NORTH CAROLINA AVE	ATLANTIC CITY, NJ	08401
58	1	C1410	100 S NORTH CAROLINA 1410	FAIRFIELD ATLANTIC CITY	100 S NORTH CAROLINA AVE	ATLANTIC CITY, NJ	08401
58	1	C1411	100 S NORTH CAROLINA 1411	FAIRFIELD ATLANTIC CITY	100 S NORTH CAROLINA AVE	ATLANTIC CITY, NJ	08401
58	1	C1412	100 S NORTH CAROLINA 1412	FAIRFIELD ATLANTIC CITY	100 S NORTH CAROLINA AVE	ATLANTIC CITY, NJ	08401
58	1	C1501	100 S NORTH CAROLINA 1501	FAIRFIELD ATLANTIC CITY	100 S NORTH CAROLINA AVE	ATLANTIC CITY, NJ	08401
58	1	C1502	100 S NORTH CAROLINA 1502	FAIRFIELD ATLANTIC CITY	100 S NORTH CAROLINA AVE	ATLANTIC CITY, NJ	08401
58	1	C1503	100 S NORTH CAROLINA 1503	FAIRFIELD ATLANTIC CITY	100 S NORTH CAROLINA AVE	ATLANTIC CITY, NJ	08401

BLOCK	LOT	QUAL	Location	Owner	Street Address	City\State	ZipCode
58	1	C1504	100 S NORTH CAROLINA 1504	FAIRFIELD ATLANTIC CITY	100 S NORTH CAROLINA AVE	ATLANTIC CITY, NJ	08401
58	1	C1505	100 S NORTH CAROLINA 1505	FAIRFIELD ATLANTIC CITY	100 S NORTH CAROLINA AVE	ATLANTIC CITY, NJ	08401
58	1	C1506	100 S NORTH CAROLINA 1506	FAIRFIELD ATLANTIC CITY	100 S NORTH CAROLINA AVE	ATLANTIC CITY, NJ	08401
58	1	C1507	100 S NORTH CAROLINA 1507	FAIRFIELD ATLANTIC CITY	100 S NORTH CAROLINA AVE	ATLANTIC CITY, NJ	08401
58	1	C1508	100 S NORTH CAROLINA 1508	FAIRFIELD ATLANTIC CITY	100 S NORTH CAROLINA AVE	ATLANTIC CITY, NJ	08401
58	1	C1509	100 S NORTH CAROLINA 1509	FAIRFIELD ATLANTIC CITY	100 S NORTH CAROLINA AVE	ATLANTIC CITY, NJ	08401
58	1	C1510	100 S NORTH CAROLINA 1510	FAIRFIELD ATLANTIC CITY	100 S NORTH CAROLINA AVE	ATLANTIC CITY, NJ	08401
58	1	C1511	100 S NORTH CAROLINA 1511	FAIRFIELD ATLANTIC CITY	100 S NORTH CAROLINA AVE	ATLANTIC CITY, NJ	08401
58	1	C1512	100 S NORTH CAROLINA 1512	FAIRFIELD ATLANTIC CITY	100 S NORTH CAROLINA AVE	ATLANTIC CITY, NJ	08401
58	1	C1601	100 S NORTH CAROLINA 1601	FAIRFIELD ATLANTIC CITY	100 S NORTH CAROLINA AVE	ATLANTIC CITY, NJ	08401
58	1	C1602	100 S NORTH CAROLINA 1602	FAIRFIELD ATLANTIC CITY	100 S NORTH CAROLINA AVE	ATLANTIC CITY, NJ	08401
58	1	C1603	100 S NORTH CAROLINA 1603	FAIRFIELD ATLANTIC CITY	100 S NORTH CAROLINA AVE	ATLATIC CITY, NJ	08401
58	1	C1604	100 S NORTH CAROLINA 1604	FAIRFIELD ATLANTIC CITY	100 S NORTH CAROLINA AVE	ATLANTIC CITY, NJ	08401
58	1	C1605	100 S NORTH CAROLINA 1605	FAIRFIELD ATLANTIC CITY	100 S NORTH CAROLINA AVE	ATLANTIC CITY, NJ	08401
58	1	C1606	100 S NORTH CAROLINA 1606	FAIRFIELD ATLANTIC CITY	100 S NORTH CAROLINA AVE	ATLANTIC CITY, NJ	08401
58	1	C1607	100 S NORTH CAROLINA 1607	FAIRFIELD ATLANTIC CITY	100 S NORTH CAROLINA AVE	ATLANTIC CITY, NJ	08401
58	1	C1608	100 S NORTH CAROLINA 1608	FAIRFIELD ATLANTIC CITY	100 S NORTH CAROLINA AVE	ATLANTIC CITY, NJ	08401
58	1	C1609	100 S NORTH CAROLINA 1609	FAIRFIELD ATLANTIC CITY	100 S NORTH CAROLINA AVE	ATLANTIC CITY, NJ	08401
58	1	C1610	100 S NORTH CAROLINA 1610	FAIRFIELD ATLANTIC CITY	100 S NORTH CAROLINA AVE	ATLANTIC CITY, NJ	08401
58	1	C1611	100 S NORTH CAROLINA 1611	FAIRFIELD ATLANTIC CITY	100 S NORTH CAROLINA AVE	ATLANTIC CITY, NJ	08401
58	1	C1612	100 S NORTH CAROLINA 1612	FAIRFIELD ATLANTIC CITY	100 S NORTH CAROLINA AVE	ATLANTIC CITY, NJ	08401
58	1	C1701	100 S NORTH CAROLINA 1701	FAIRFIELD ATLANTIC CITY	100 S NORTH CAROLINA AVE	ATLANTIC CITY, NJ	08401
58	1	C1702	100 S NORTH CAROLINA 1702	FAIRFIELD ATLANTIC CITY	100 S NORTH CAROLINA AVE	ATLANTIC CITY, NJ	08401
58	1	C1703	100 S NORTH CAROLINA 1703	FAIRFIELD ATLANTIC CITY	100 S NORTH CAROLINA AVE	ATLANTIC CITY, NJ	08401

BLOCK	LOT	QUAL	Location	Owner	Street Address	City\State	ZipCode
58	1	C1704	100 S NORTH CAROLINA 1704	FAIRFIELD ATLANTIC CITY	100 S NORTH CAROLINA AVE	ATLANTIC CITY, NJ	08401
58	1	C1705	100 S NORTH CAROLINA 1705	FAIRFIELD ATLANTIC CITY	100 S NORTH CAROLINA AVE	ATLANTIC CITY, NJ	08401
58	1	C1706	100 S NORTH CAROLINA 1706	FAIRFIELD ATLANTIC CITY	100 S NORTH CAROLINA AVE	ATLANTIC CITY, NJ	08401
58	1	C1707	100 S NORTH CAROLINA 1707	FAIRFIELD ATLANTIC CITY	100 S NORTH CAROLINA AVE	ATLANTIC CITY, NJ	08401
58	1	C1708	100 S NORTH CAROLINA 1708	FAIRFIELD ATLANTIC CITY	100 S NORTH CAROLINA AVE	ATLANTIC CITY, NJ	08401
58	1	C1709	100 S NORTH CAROLINA 1709	FAIRFIELD ATLANTIC CITY	100 S NORTH CAROLINA AVE	ATLANTIC CITY, NJ	08401
58	1	C1710	100 S NORTH CAROLINA 1710	FAIRFIELD ATLANTIC CITY	100 S NORTH CAROLINA AVE	ATLANTIC CITY, NJ	08401
58	1	C1711	100 S NORTH CAROLINA 1711	FAIRFIELD ATLANTIC CITY	100 S NORTH CAROLINA AVE	ATLANTIC CITY, NJ	08401
58	1	C1712	100 S NORTH CAROLINA 1712	FAIRFIELD ATLANTIC CITY	100 S NORTH CAROLINA AVE	ATLANTIC CITY, NJ	08401
58	1	C1801	100 S NORTH CAROLINA 1801	FAIRFIELD ATLANTIC CITY	100 S NORTH CAROLINA AVE	ATLANTIC CITY, NJ	08401
58	1	C1802	100 S NORTH CAROLINA 1802	FAIRFIELD ATLANTIC CITY	100 S NORTH CAROLINA AVE	ATLANTIC CITY, NJ	08401
58	1	C1803	100 S NORTH CAROLINA 1803	FAIRFIELD ATLANTIC CITY	100 S NORTH CAROLINA AVE	ATLANTIC CITY, NJ	08401
58	1	C1804	100 S NORTH CAROLINA 1804	FAIRFIELD ATLANTIC CITY	100 S NORTH CAROLINA AVE	ATLANTIC CITY, NJ	08401
58	1	C1805	100 S NORTH CAROLINA 1805	FAIRFIELD ATLANTIC CITY	100 S NORTH CAROLINA AVE	ATLANTIC CITY, NJ	08401
58	1	C1806	100 S NORTH CAROLINA 1806	FAIRFIELD ATLANTIC CITY	100 S NORTH CAROLINA AVE	ATLANTIC CITY, NJ	08401
58	1	C1807	100 S NORTH CAROLINA 1807	FAIRFIELD ATLANTIC CITY	100 S NORTH CAROLINA AVE	ATLANTIC CITY, NJ	08401
58	1	C1808	100 S NORTH CAROLINA 1808	FAIRFIELD ATLANTIC CITY	100 S NORTH CAROLINA AVE	ATLANTIC CITY, NJ	08401
58	1	C1809	100 S NORTH CAROLINA 1809	FAIRFIELD ATLANTIC CITY	100 S NORTH CAROLINA AVE	ATLANTIC CITY, NJ	08401
58	1	C1810	100 S NORTH CAROLINA 1810	FAIRFIELD ATLANTIC CITY	100 S NORTH CAROLINA AVE	ATLANTIC CITY, NJ	08401
58	1	C1811	100 S NORTH CAROLINA 1811	FAIRFIELD ATLANTIC CITY	100 S NORTH CAROLINA AVE	ATLANTIC CITY, NJ	08401
58	1	C1812	100 S NORTH CAROLINA 1812	FAIRFIELD ATLANTIC CITY	100 S NORTH CAROLINA AVE	ATLANTIC CITY, NJ	08401
58	1	C1901	100 S NORTH CAROLINA 1901	FAIRFIELD ATLANTIC CITY	100 S NORTH CAROLINA AVE	ATLANTIC CITY, NJ	08401
58	1	C1902	100 S NORTH CAROLINA 1902	FAIRFIELD ATLANTIC CITY	100 S NORTH CAROLINA AVE	ATLANTIC CITY, NJ	08401
58	1	C1903	100 S NORTH CAROLINA 1903	FAIRFIELD ATLANTIC CITY	100 S NORTH CAROLINA AVE	ATLANTIC CITY, NJ	08401

BLOCK	LOT	QUAL	Location	Owner	Street Address	City\State	ZipCode
58	1	C1904	100 S NORTH CAROLINA 1904	FAIRFIELD ATLANTIC CITY	100 S NORTH CAROLINA AVE	ATLANTIC CITY, NJ	08401
58	1	C1905	100 S NORTH CAROLINA 1905	FAIRFIELD ATLANTIC CITY	100 S NORTH CAROLINA AVE	ATLANTIC CITY, NJ	08401
58	1	C1906	100 S NORTH CAROLINA 1906	FAIRFIELD ATLANTIC CITY	100 S NORTH CAROLINA AVE	ATLANTIC CITY, NJ	08401
58	1	C1907	100 S NORTH CAROLINA 1907	FAIRFIELD ATLANTIC CITY	100 S NORTH CAROLINA AVE	ATLANTIC CITY, NJ	08401
58	1	C1908	100 S NORTH CAROLINA 1908	FAIRFIELD ATLANTIC CITY	100 S NORTH CAROLINA AVE	ATLANTIC CITY, NJ	08401
58	1	C1909	100 S NORTH CAROLINA 1909	FAIRFIELD ATLANTIC CITY	100 S NORTH CAROLINA AVE	ATLANTIC CITY, NJ	08401
58	1	C1910	100 S NORTH CAROLINA 1910	FAIRFIELD ATLANTIC CITY	100 S NORTH CAROLINA AVE	ATLANTIC CITY, NJ	08401
58	1	C1911	100 S NORTH CAROLINA 1911	FAIRFIELD ATLANTIC CITY	100 S NORTH CAROLINA AVE	ATLANTIC CITY, NJ	08401
58	1	C1912	100 S NORTH CAROLINA 1912	FAIRFIELD ATLANTIC CITY	100 S NORTH CAROLINA AVE	ATLANTIC CITY, NJ	08401
58	1	C2001	100 S NORTH CAROLINA 2001	FAIRFIELD ATLANTIC CITY	100 S NORTH CAROLINA AVE	ATLANTIC CITY, NJ	08401
58	1	C2002	100 S NORTH CAROLINA 2002	FAIRFIELD ATLANTIC CITY	100 S NORTH CAROLINA AVE	ATLANTIC CITY, NJ	08401
58	1	C2003	100 S NORTH CAROLINA 2003	FAIRFIELD ATLANTIC CITY	100 S NORTH CAROLINA AVE	ATLANTIC CITY, NJ	08401
58	1	C2004	100 S NORTH CAROLINA 2004	FAIRFIELD ATLANTIC CITY	C2005 NORTH CAROLINA AVE	ATLANTIC CITY, NJ	08401
58	1	C2005	100 S NORTH CAROLINA 2005	FAIRFIELD ATLANTIC CITY	100 S NORTH CAROLINA AVE	ATLANTIC CITY, NJ	08401
58	1	C2006	100 S NORTH CAROLINA 2006	FAIRFIELD ATLANTIC CITY	100 S NORTH CAROLINA AVE	ATLANTIC CITY, NJ	08401
58	1	C2007	100 S NORTH CAROLINA 2007	FAIRFIELD ATLANTIC CITY	100 S NORTH CAROLINA AVE	ATLANTIC CITY, NJ	08401
58	1	C2008	100 S NORTH CAROLINA 2008	FAIRFIELD ATLANTIC CITY	100 S NORTH CAROLINA AVE	ATLANTIC CITY, NJ	08401
58	1	C2009	100 S NORTH CAROLINA 2009	FAIRFIELD ATLANTIC CITY	100 S NORTH CAROLINA AVE	ATLANTIC CITY, NJ	08401
58	1	C2010	100 S NORTH CAROLINA 2010	FAIRFIELD ATLANTIC CITY	100 S NORTH CAROLINA AVE	ATLANTIC CITY, NJ	08401
58	1	C2011	100 S NORTH CAROLINA 2011	FAIRFIELD ATLANTIC CITY	100 S NORTH CARLINA AVE	ATLANTIC CITY, NJ	08401
58	1	C2012	100 S NORTH CAROLINA 2012	FAIRFIELD ATLANTIC CITY	100 S NORTH CAROLINA AVE	ATLANTIC CITY, NJ	08401
58	1	C2101	100 S NORTH CAROLINA 2101	FAIRFIELD ATLANTIC CITY	100 S NORTH CAROLINA AVE	ATLANTIC CITY, NJ	08401
58	1	C2102	100 S NORTH CAROLINA 2102	FAIRFIELD ATLANTIC CITY	100 S NORTH CAROLINA AVE	ATLANTIC CITY, NJ	08401
58	1	C2103	100 S NORTH CAROLINA 2103	FAIRFIELD ATLANTIC CITY	100 S NORTH CAROLINA AVE	ATLANTIC CITY, NJ	08401

BLOCK	LOT	QUAL	Location	Owner	Street Address	City\State	ZipCode
58	1	C2104	100 S NORTH CAROLINA 2104	FAIRFIELD ATLANTIC CITY	100 S NORTH CAROLINA AVE	ATLANTIC CITY, NJ	08401
58	1	C2105	100 S NORTH CAROLINA 2105	FAIRFIELD ATLANTIC CITY	100 S NORTH CAROLINA AVE	ATLANTIC CITY, NJ	08401
58	1	C2106	100 S NORTH CAROLINA 2106	FAIRFIELD ATLANTIC CITY	100 S NORTH CAROLINA AVE	ATLANTIC CITY, NJ	08401
58	1	C2107	100 S NORTH CAROLINA 2107	FAIRFIELD ATLANTIC CITY	100 S NORTH CAROLINA AVE	ATLANTIC CITY, NJ	08401
58	1	C2108	100 S NORTH CAROLINA 2108	FAIRFIELD ATLANTIC CITY	100 S NORTH CAROLINA AVE	ATLANTIC CITY, NJ	08401
58	1	C2109	100 S NORTH CAROLINA 2109	FAIRFIELD ATLANTIC CITY	100 S NORTH CAROLINA AVE	ATLANTIC CITY, NJ	08401
58	1	C2110	100 S NORTH CAROLINA 2110	FAIRFIELD ATLANTIC CITY	100 S NORTH CAROLINA AVE	ATLANTIC CITY, NJ	08401
58	1	C2111	100 S NORTH CAROLINA 2111	FAIRFIELD ATLANTIC CITY	100 S NORTH CAROLINA AVE	ATLANTIC CITY, NJ	08401
58	1	C2112	100 S NORTH CAROLINA 2112	FAIRFIELD ATLANTIC CITY	100 S NORTH CAROLINA AVE	ATLANTIC CITY, NJ	08401
58	1	C2201	100 S NORTH CAROLINA 2201	FAIRFIELD ATLANTIC CITY	100 S NORTH CAROLINA AVE	ATLANTIC CITY, NJ	08401
58	1	C2202	100 S NORTH CAROLINA 2202	FAIRFIELD ATLANTIC CITY	100 S NORTH CAROLINA AVE	ATLANTIC CITY, NJ	08401
58	1	C2203	100 S NORTH CAROLINA 2203	FAIRFIELD ATLANTIC CITY	100 S NORTH CAROLINA AVE	ATLANTIC CITY, NJ	08401
58	1	C2204	100 S NORTH CAROLINA 2204	FAIRFIELD ATLANTIC CITY	100 S NORTH CAROLINA AVE	ATLANTIC CITY, NJ	08401
58	1	C2205	100 S NORTH CAROLINA 2205	FAIRFIELD ATLANTIC CITY	100 S NORTH CAROLINA AVE	ATLANTIC CITY, NJ	08401
58	1	C2206	100 S NORTH CAROLINA 2206	FAIRFIELD ATLANTIC CITY	100 S NORTH CAROLINA AVE	ATLANTIC CITY, NJ	08401
58	1	C2207	100 S NORTH CAROLINA 2207	FAIRFIELD ATLANTIC CITY	100 S NORTH CAROLINA AVE	ATLANTIC CITY, NJ	08401
58	1	C2208	100 S NORTH CAROLINA 2208	FAIRFIELD ATLANTIC CITY	100 S NORTH CAROLINA AVE	ATLANTIC CITY, NJ	08401
58	1	C2209	100 S NORTH CAROLINA 2209	FAIRFIELD AYLANTIC CITY	100 S NORTH CAROLINA AVE	ATLANTIC CITY, NJ	08401
58	1	C2210	100 S NORTH CAROLINA 2210	FAIRFIELD ATLANTIC CITY	100 S NORTH CAROLINA AVE	ATLANTIC CITY, NJ	08401
58	1	C2211	100 S NORTH CAROLINA 2211	FAIRFIELD ATLANTIC CITY	100 S NORTH CAROLINA AVE	ATLANTIC CITY, NJ	08401
58	1	C2212	100 S NORTH CAROLINA 2212	FAIRFIELD ATLANTIC CITY	100 S NORTH CAROLINA AVE	ATLANTIC CITY, NJ	08401
58	1	C2301	100 S NORTH CAROLINA 2301	FAIRFIELD ATLANTIC CITY	100 S NORTH CAROLINA AVE	ATLANTIC CITY, NJ	08401
58	1	C2302	100 S NORTH CAROLINA 2302	FAIRFIELD ATLANTIC CITY	100 S NORTH CAROLINA AVE	ATLANTIC CITY, NJ	08401
58	1	C2303	100 S NORTH CAROLINA 2303	FAIRFIELD ATLANTIC CITY	100 S NORTH CAROLINA AVE	ATLANTIC CITY, NJ	08401

BLOCK	LOT	QUAL	Location	Owner	Street Address	City\State	ZipCode
58	1	C2304	100 S NORTH CAROLINA 2304	FAIRFIELD ATLANTIC CITY	100 S NORTH CAROLINA AVE	ATLANTIC CITY, NJ	08401
58	1	C2305	100 S NORTH CAROLINA 2305	FAIRFIELD ATLANTIC CITY	100 S NORTH CAROLINA AVE	ATLANTIC CITY, NJ	08401
58	1	C2306	100 S NORTH CAROLINA 2306	FAIRFIELD ATLANTIC CITY	100 S NORTH CAROLINA AVE	ATLANTIC CITY, NJ	08401
58	1	C2307	100 S NORTH CAROLINA 2307	FAIRFIELD ATLANTIC CITY	100 S NORTH CAROLINA AVE	ATLANTIC CITY, NJ	08401
58	1	C2308	100 S NORTH CAROLINA 2308	FAIRFIELD ATLANTIC CITY	100 S NORTH CAROLINA AVE	ATLANTIC CITY, NJ	08401
58	1	C2309	100 S NORTH CAROLINA 2309	FAIRFIELD ATLANTIC CITY	100 S NORTH CAROLINA AVE	ATLANTIC CITY, NJ	08401
58	1	C2310	100 S NORTH CAROLINA 2310	FAIRFIELD ATLANTIC CITY	100 S NORTH CAROLINA AVE	ATLANTIC CITY, NJ	08401
58	1	C2311	100 S NORTH CAROLINA 2311	FAIRFIELD ATLANTIC CITY	100 S NORTH CAROLINA AVE	ATLANTIC CITY, NJ	08401
58	1	C2401	100 S NORTH CAROLINA 2401	FAIRFIELD ATLANTIC CITY	100 S NORTH CAROLINA AVE	ATLANTIC CITY, NJ	08401
58	1	C2402	100 S NORTH CAROLINA 2402	FAIRFIELD ATLANTIC CITY	100 S NORTH CAROLINA AVE	ATLANTIC CITY, NJ	08401
58	1	C2403	100 S NORTH CAROLINA 2403	FAIRFIELD ATLANTIC CITY	100 S NORTH CAROLINA AVE	ATLANTIC CITY, NJ	08401
58	1	C2404	100 S NORTH CAROLINA 2404	FAIRFIELD ATLANTIC CITY	100 S NORTH CAROLINA AVE	ATLANTIC CITY, NJ	08401
58	1	C2405	100 S NORTH CAROLINA 2405	FAIRFIELD ATLANTIC CITY	100 S NORTH CAROLINA AVE	ATLANTIC CITY, NJ	08401
58	1	C2406	100 S NORTH CAROLINA 2406	FAIRFIELD ATLANTIC CITY	100 S NORTH CAROLINA AVE	ATLANTIC CITY, NJ	08401
58	1	C2407	100 S NORTH CAROLINA 2407	FAIRFIELD ATLANTIC CITY	100 S NORTH CAROLINA AVE	ATLANTIC CITY, NJ	08401
58	1	C2408	100 S NORTH CAROLINA 2408	FAIRFIELD ATLANTIC CITY	100 S NORTH CAROLINA AVE	ATLANTIC CITY, NJ	08401
58	1	C2409	100 S NORTH CAROLINA 2409	FAIRFIELD ATLANTIC CITY	100 S NORTH CAROLINA AVE	ATLANTIC CITY, NJ	08401
58	1	C2410	100 S NORTH CAROLINA 2410	FAIRFIELD ATLANTIC CITY	100 S NORTH CAROLINA AVE	ATLANTIC CITY, NJ	08401
58	1	C2411	100 S NORTH CAROLINA 2411	FAIRFIELD ATLANTIC CITY	100 S NORTH CAROLINA AVE	ATLANTIC CITY, NJ	08401
58	1	C2412	100 S NORTH CAROLINA 2412	FAIRFIELD ATLANTIC CITY	100 S NORTH CAROLINA AVE	ATLANTIC CITY, NJ	08401
58	1	C2501	100 S NORTH CAROLINA 2501	FAIRFIELD ATLANTIC CITY	100 S NORTH CAROLINA AVE	ATLANTIC CITY, NJ	08401
58	1	C2502	100 S NORTH CAROLINA 2502	FAIRFIELD ATLANTIC CITY	100 S NORTH CAROLINA AVE	ATLANTIC CITY, NJ	08401
58	1	C2503	100 S NORTH CAROLINA 2503	FAIRFIELD ATLANTIC CITY	100 S NORTH CAROLINA AVE	ATLANTIC CITY, NJ	08401
58	1	C2504	100 S NORTH CAROLINA 2504	FAIRFIELD ATLANTIC CITY	100 S NORTH CAROLINA AVE	ATLANTIC CITY, NJ	08401

BLOCK	LOT	QUAL	Location	Owner	Street Address	City\State	ZipCode
58	1	C2509	100 S NORTH CAROLINA 2509	FAIRFIELD ATLANTIC CITY	100 S NORTH CAROLINA AVE	ATLANTIC CITY, NJ	08401
58	1	C2510	100 S NORTH CAROLINA 2510	FAIRFIELD ATLANTIC CITY	100 S NORTH CAROLINA AVE	ATLANTIC CITY, NJ	08401
58	1	C2511	100 S NORTH CAROLINA 2511	FAIRFIELD ATLANTIC CITY	100 S NORTH CAROLINA AVE	ATLANTIC CITY, NJ	08401
58	1	C2512	100 S NORTH CAROLINA 2512	FAIRFIELD ATLANTIC CITY	100 S NORTH CAROLINA AVE	ATLANTIC CITY, NJ	08401
58	1	C2601	100 S NORTH CAROLINA 2601	FAIRFIELD ATLANTIC CITY	100 S NORTH CAROLINA AVE	ATLANTIC CITY, NJ	08401
58	1	C2602	100 S NORTH CAROLINA 2602	FAIRFIELD ATLANTIC CITY	100 S NORTH CAROLINA AVE	ATLANTIC CITY, NJ	08401
58	1	C2603	100 S NORTH CAROLINA 2603	FAIRFIELD ATLANTIC CITY	100 S NORTH CAROLINA AVE	ATLANTIC CITY, NJ	08401
58	1	C2604	100 S NORTH CAROLINA 2604	FAIRFIELD ATLANTIC CITY	100 S NORTH CAROLINA AVE	ATLANTIC CITY, NJ	08401
58	1	C2605	100 S NORTH CAROLINA 2605	FAIRFIELD ATLANTIC CITY	100 S NORTH CAROLINA AVE	ATLANTIC CITY, NJ	08401
58	1	C2606	100 S NORTH CAROLINA 2606	FAIRFIELD ATLANTIC CITY	100 S NORTH CAROLINA AVE	ATLANTIC CITY, NJ	08401
58	1	C2607	100 S NORTH CAROLINA 2607	FAIRFIELD ATLANTIC CITY	100 S NORTH CAROLINA AVE	ATLANTIC CITY, NJ	08401
58	1	C2608	100 S NORTH CAROLINA 2608	FAIRFIELD ATLANTIC CITY	100 S NORTH CAROLINA AVE	ATLANTIC CITY, NJ	08401
58	1	C2609	100 S NORTH CAROLINA 2609	FAIRFIELD ATLANTIC CITY	100 S NORTH CAROLINA AVE	ATLANTIC CITY, NJ	08401
58	1	C2610	100 S NORTH CAROLINA 2610	FAIRFIELD ATLANTIC CITY	100 S NORTH CAROLINA AVE	ATLANTIC CITY, NJ	08401
58	1	C2706	100 S NORTH CAROLINA 2706	FAIRFIELD ATLANTIC CITY	100 S NORTH CAROLINA AVE	ATLANTIC CITY, NJ	08401
58	1	C2707	100 S NORTH CAROLINA 2707	FAIRFIELD ATLANTIC CITY	100 S NORTH CAROLINA AVE	ATLANTIC CITY, NJ	08401
58	1	C2708	100 S NORTH CAROLINA 2708	FAIRFIELD ATLANTIC CITY	100 S NORTH CAROLINA AVE	ATLANTIC CITY, NJ	08401
58	1	C2709	100 S NORTH CAROLINA 2709	FAIRFIELD ATLANTIC CITY	100 S NORTH CAROLINA AVE	ATLANTIC CITY, NJ	08401
58	1	C2710	100 S NORTH CAROLINA 2710	FAIRFIELD ATLANTIC CITY	100 S NORTH CAROLINA AVE	ATLANTIC CITY, NJ	08401
58	1	C2711	100 S NORTH CAROLINA 2711	FAIRFIELD ATLANTIC CITY	100 S NORTH CAROLINA AVE	ATLANTIC CITY, NJ	08401
58	1	C2712	100 S NORTH CAROLINA 2712	FAIRFIELD ATLANTIC CITY	100 S NORTH CAROLINA AVE	ATLANTIC CITY, NJ	08401
58	1	C2801	100 S NORTH CAROLINA 2801	FAIRFIELD ATLANTIC CITY	100 S NORTH CAROLINA AVE	ATLANTIC CITY, NJ	08401
58	1	C2802	100 S NORTH CAROLINA 2802	FAIRFIELD ATLANTIC CITY	8427 S PARK CIRCLE #500	ORLANDO, FL	32819
58	1	C2803	100 S NORTH CAROLINA 2803	FAIRFIELD ATLANTIC CITY	100 S NORTH CAROLINA AVE	ATLANTIC CITY, NJ	08401

BLOCK	LOT	QUAL	Location	Owner	Street Address	City\State	ZipCode
58	2		110 S NORTH CAROLINA AVE	FAIRFIELD ATLANTIC CITY SKYLINE	8427 S PARK CIRCLE	ORLANDO FL	32819
58	3		118 S NORTH CAROLINA AVE	YABBA LLC	11 RIVINGTON AVE	NEW YORK, NY	10002
58	4		124 S NORTH CAROLINA AVE	ATLANTIC SAI MOTEL, LLC	124 S NORTH CAROLINA AVE	ATLANTIC CITY, NJ	08401
58	6		136 S NORTH CAROLINA AVE	ATLANTIC SAI MOTEL, LLC	3001 PACIFIC AVE	ATLANTIC CITY, NJ	08401
58	7		138 S NORTH CAROLINA AVE	DGMB CASINO, LLC	1133 BOARDWALK	ATLANTIC CITY, NJ	08401
58	8		140 S NORTH CAROLINA AVE	DGMB CASINO, LLC	1133 BOARDWALK	ATLANTIC CITY, NJ	08401
58	9		152 S NORTH CAROLINA AVE	DGMB CASINO,LLC	1133 BOARDWALK	ATLANTIC CITY, NJ	08401
58	10		156 S NORTH CAROLINA AVE	DGMB CASINO, LLC	1133 BOARDWALK	ATLANTIC CITY, NJ	08401
58	11		157 S CHALFONTE AVE	DGMB CASINO, LLC	1133 BOARDWALK	ATLANTIC CITY, NJ	08401
59	1		1201 BOARDWALK	DGMB CASINO, LLC	1133 BOARDWALK	ATLANTIC CITY, NJ	08401
59	1.01		AIR RIGHTS NORTH CAROLINA	DGMB CASINO, LLC	1133 BOARDWALK	ATLANTIC CITY, NJ	08401
59	2		1243 BOARDWALK	O & S MANAGEMENT LLC,	4A ARTHUR COURT	MONTVALE, NJ	07645
59	3		1241 BOARDWALK	DGMB CASINO LLC & RESORTS CASINO	1133 BOARDWALK	ATLANTIC CITY, NJ	08401
60	1		1104 PACIFIC AVE	ATLANTIC CITY SAI, LLC	20 WEXFORD LANE	LINWOOD, NJ	08221
60	2		1102 PACIFIC AVE	MISS CHRIS LAND, LLC	215 N WASHINGTON AVE	VENTNOR, NJ	08406
60	3		1100 PACIFIC AVE	AGS PROPERTY MANAGEMENT LLC	112 S. WEYMOUTH AVE	VENTNOR, NJ	08406
60	4		104 S PENNSYLVANIA AVE	DGMB CASINO, LLC	1133 BOARDWALK	ATLANTIC CITY, NJ	08401
60	5		110 S PENNSYLVANIA AVE	DGMB CASINO, LLC	1133 BOARDWALK	ATLANTIC CITY, NJ	08401
60	6		114 S PENNSYLVANIA AVE	DGMB CASINO, LLC	1133 BOARDWALK	ATLANTIC CITY, NJ	08401
60	7		118 S PENNSYLVANIA AVE	DGMB CASINO, LLC	1133 BOARDWALK	ATLANTIC CITY, NJ	08401
60	8		120 S PENNSYLVANIA AVE	DGMB CASINO, LLC	1133 BOARDWALK	ATLANTIC CITY, NJ	08401
60	9		134 S PENNSYLVANIA AVE	DGMB CASINO, LLC	1133 BOARDWALK	ATLANTIC CITY, NJ	08401
60	10		136 S PENNSYLVANIA AVE	DGMB CASINO, LLC	1133 BOARDWALK	ATLANTIC CITY, NJ	08401

BLOCK	LOT	QUAL	Location	Owner	Street Address	City\State	ZipCode
60	11		138 S PENNSYLVANIA AVE	DGMB CASINO, LLC	1133 BOARDWALK	ATLANTIC CITY, NJ	08401
60	12		152 S PENNSYLVANIA AVE	GROSS, M & BEACON TRUST COMPANY	163 MADISON AVE #600	MORRISTOWN, NJ	07960
60	13		158 S PENNSYLVANIA AVE	GROSS, M & FIRST FIDELITY BANK	1133 BOARDWALK	ATLANTIC CITY, NJ	08401
60	14		1121 BOARDWALK	DGMB CASINO, LLC	1133 BOARDWALK	ATLANTIC CITY, NJ	08401
60	15		1109 BOARDWALK	DGMB CASINO, LLC	1133 BOARDWALK	ATLANTIC CITY, NJ	08401
60	16		AIR RIGHTS NORTH CAROLINA	DGMB CASINO, LLC	1133 BOARDWALK	ATLANTIC CITY, NJ	08401
60	17		MANSION AVE	DGMB CASINO, LLC	1133 BOARDWALK 0	ATLANTIC CITY, NJ	08401
60	18		155 S NORTH CAROLINA AVE	GROSS, M & FIRST FIDELITY BANK	1133 BOARDWALK	ATLANTIC CITY, NJ	08401
60	19		MANSION AVE	DGMB CASINO, LLC	1133 BOARDWALK	ATLANTIC CITY, NJ	08401
60	20		153 S NORTH CAROLINA RR	DGMB CASINO, LLC	1133 BOARDWALK	ATLANTIC CITY, NJ	08401
60	21		153 S NORTH CAROLINA AVE	GROSS, M & FIRST FIDELITY BANK	1133 BOARDWALK	ATLANTIC CITY, NJ	08401
60	22		MANSION AVE	GROSS, M & FIRST FIDELITY BANK	1133 BOARDWALK	ATLANTIC CITY, NJ	08401
60	23		151 S NORTH CAROLINA AVE	FALCAR INC % RESORTS INTERNATIONAL	1133 BOARDWALK	ATLANTIC CITY, NJ	08401
60	24		MANSION AVE	FALCAR, INC % RESORTS INTERNATIONAL	1133 BOARDWALK	ATLANTIC CITY, NJ	08401
60	25		147 S NORTH CAROLINA AVE	GROSS, M & FIRST FIDELITY BANK	1133 BOARDWALK	ATLANTIC CITY, NJ	08401
60	26		147 S NORTH CAROLINA RR	GROSS, M & FIRST FIDELITY BANK	1133 BOARDWALK	ATLANTIC CITY, NJ	08401
60	27		158 S PENNSYLVANIA AVE RR	GROSS, M & FIRST FIDELITY BANK	1133 BOARDWALK	ATLANTIC CITY, NJ	08401
60	28		MANSION AVE	DGMB CASINO, LLC	1133 BOARDWALK	ATLANTIC CITY, NJ	08401
60	29		152 S PENNSYLVANIA AVE RR	GROSS, M & FIRST FIDELITY BANK	1133 BOARDWALK	ATLANTIC CITY, NJ	08401
60	30		145 S NORTH CAROLINA AVE	DGMB CASINO, LLC	1133 BOARDWALK	ATLANTIC CITY, NJ	08401
60	31		139 S NORTH CAROLINA AVE	DGMB CASINO, LLC	1133 BOARDWALK	ATLANTIC CITY, NJ	08401
60	32		135 S NORTH CAROLINA AVE	POPPYPHIL LLC	3 WEXFOOD LN	LINWOOD, NJ	08221

BLOCK	LOT	QUAL	Location	Owner	Street Address	City\State	ZipCode
60	33		133 S NORTH CAROLINA AVE	DGMB CASINO, LLC	1133 BOARDWALK	ATLANTIC CITY, NJ	08401
60	34		127 S NORTH CAROLINA AVE	DGMB CASINO, LLC	1133 BOARDWALK	ATLANTIC CITY, NJ	08401
60	35		121 S NORTH CAROLINA AVE	DGMB CASINO, LLC	1133 BOARDWALK	ATLANTIC CITY, NJ	08401
60	36		115 S NORTH CAROLINA AVE	DGMB CASINO, LLC	1133 BOARDWALK	ATLANTIC CITY, NJ	08401
60	37		109 S NORTH CAROLINA AVE	DGMB CASINO, LLC	1133 BOARDWALK	ATLANTIC CITY, NJ	08401
60	38		101 S NORTH CAROLINA AVE	DGMB CASINO, LLC	1133 BOARDWALK	ATLANTIC CITY, NJ	08401
60	39.01		1137 BOARDWALK	DGMB CASINO, LLC	1133 BOARDWALK	ATLANTIC CITY, NJ	08401
60	39.02		1139 BOARDWALK	DGMB CASINO, LLC	1133 BOARDWALK	ATLANTIC CITY, NJ	08401
61	1		1022 PACIFIC AVE	BOARDWALK 1000 LLC	1000 BOARDWALK	ATLANTIC CITY, NJ	08401
61	2		105 S PENNSYLVANIA AVE	BOARDWALK 1000 LLC	1000 BOARDWALK	ATLANTIC CITY, NJ	08401
61	3		107 S PENNSYLVANIA AVE	BOARDWALK 1000 LLC	1000 BOARDWALK	ATLANTIC CITY, NJ	08401
61	4		109 S PENNSYLVANIA AVE	BOARDWALK 1000 LLC	1000 BOARDWALK	ATLANTIC CITY, NJ	08401
61	5		1000 BOARDWALK	BOARDWALK 1000 LLC	1000 BOARDWALK	ATLANTIC CITY, NJ	08401
61	29		AIR RIGHTS BOARDWALK	STEEL PIER ASSOCIATES, LLC	PO BOX 100	OCEAN VIEW, NJ	08230
61	30		AIR RIGHTS PENNSYLVANIA	BOARDWALK 1000 LLC	1000 BOARDWALK	ATLANTIC CITY, NJ	08401
61	31		AIR RIGHTS PENNSYLVANIA	BOARDWALK 1000 LLC	1000 BOARDWALK	ATLANTIC CITY, NJ	08401
137	10		1015 PACIFIC AVE	SIX NINETEEN PROPERTY MGMT LLC	168 BARCLAY FARMS CTR	CHERRY HILL, NJ	08034
138	12		34 S PENNSYLVANIA AVE	CITY OF ATLANTIC CITY	1301 BACHARACH BLVD	ATLANTIC CITY, NJ	08401
138	13		1101 PACIFIC AVE	AUM ASHTA VINAYAK, LLC%MODI	1101 PACIFIC AVE	ATLANTIC CITY NJ	08401
138	14		1109 PACIFIC AVE	JOSEPHSON, LAWRENCE & MILMAN, JOAN	1101 PACIFIC AVE	ATLANTIC CITY NJ	08401
139	26		37 S NORTH CAROLINA AVE	THE ATLANTIC SAI MOTEL, LLC	124 SO. NO. CAROLINA AVE	ATLANTIC CITY, NJ	08401
139	27		1125 PACIFIC AVE	EDWIN, JACOBS JR & BARBONE, LOUIS	1125 PACIFIC AVE	ATLANTIC CITY, N J	08401
139	28		1129 PACIFIC AVE	THE ATLANTIC SAI MOTEL, LLC	124 SO. NO. CAROLINA AVE	ATLANTIC CITY, NJ	08401
140	16		1201 PACIFIC AVE	CITY OF ATLANTIC CITY	1301 BACHARACH BLVD	ATLANTIC CITY NJ	08401

City of Atlantic City - Map

Buffer Report

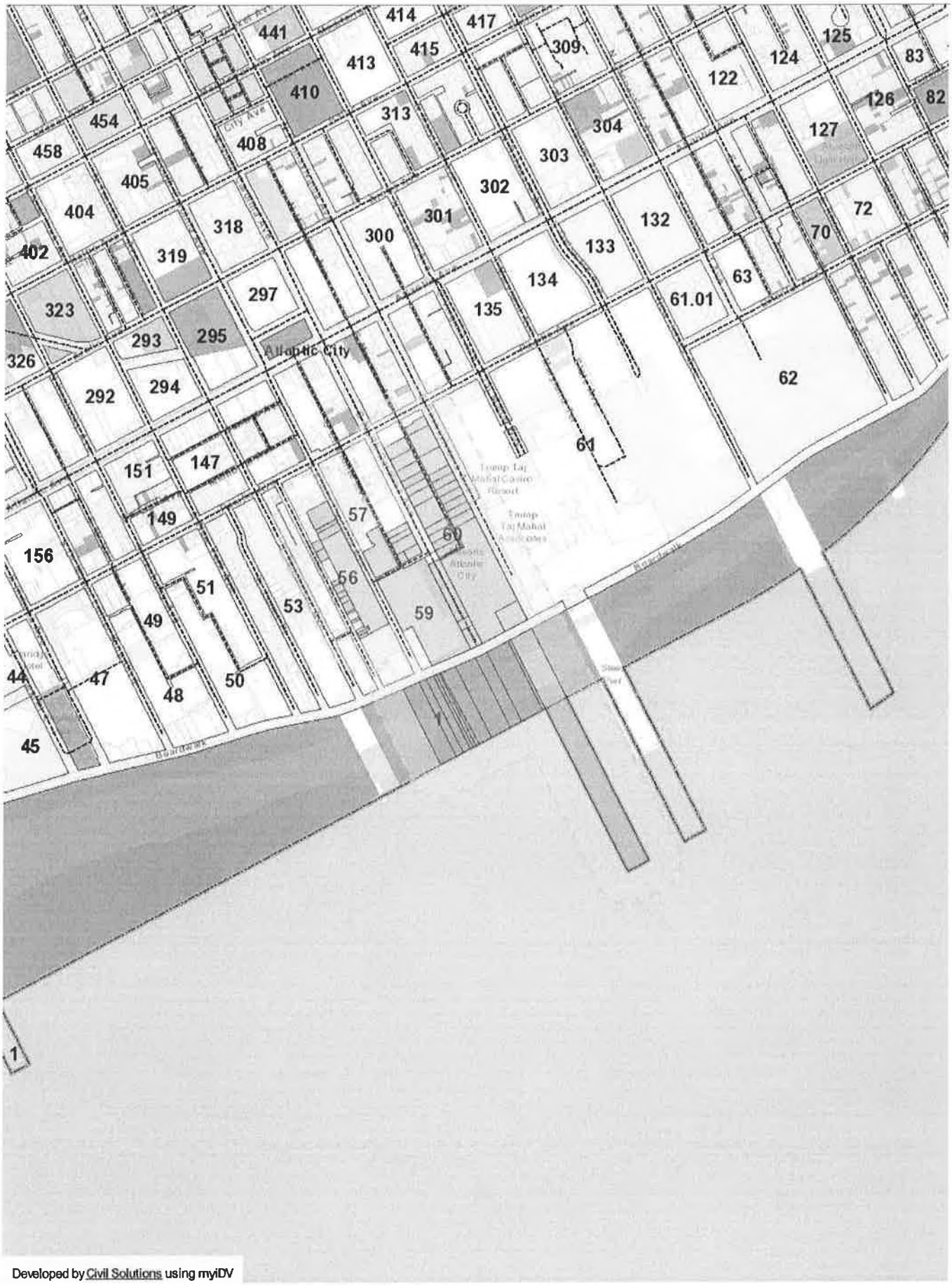

Developed by Civil Solutions using myiDV

THIS IS A LIST OF UTILITY COMPANIES THAT SERVICE THE CITY OF ATLANTIC CITY. PLEASE NOTIFY ALL ENTITIES LISTED AT LEAST TEN (10) DAYS IN ADVANCE OF THE PUBLIC HEARING.

ATLANTIC CITY MUNICIPAL UTILITIES AUTHORITY
Attn: Claude Smith, Deputy Director – (609) 345-3315
P.O. Box 117
401 N. Virginia Avenue
Atlantic City, New Jersey 08404-0117
csmith@acmua.org

ATLANTIC CITY SEWERAGE COMPANY
Attn: Dan Kwapinski – (609) 345-0131
1200 Atlantic Avenue
Suite 300
Atlantic City, New Jersey 08401
dkwapinski@acsewerage.com

ATLANTIC COUNTY UTILITIES AUTHORITY
Attn: Rick Dovey
P.O. Box 996
Pleasantville, New Jersey 08232-0996
(609) 272-6950
rdovey@acua.com

ATLANTIC CITY ELECTRIC
Attn: Mr. Gregory Brubaker, PE (Senior Manager of Strategic Planning)
2542 Fire Road
Egg Harbor Township, New Jersey 08234

SOUTH JERSEY GAS COMPANY
Atlantic Division Attn: Briana Dirkes
111 N. Franklin Boulevard
Pleasantville, New Jersey 08232-0996
(609) 645-2690
bdirkes@sjindustries.com

CITY OF ATLANTIC CITY
OFFICE OF TAX COLLECTOR
1301 BACHARACH BLVD, STE #126
ATLANTIC CITY, NEW JERSEY 08401
(609) 347-5630 FAX # 347-5621

CERTIFICATION OF PAYMENT

March 17, 2023

City of Atlantic City

This certifies that the taxes on Block: 1 Lots: 131 through 141

Locations: PUBLIC BEACH, SOUTH CAROLINA AVE ST, NORTH CAROLINA AVE ST, MANSION AVE ST END

Property Owner : CITY OF ATLANTIC CITY

are paid up to date as of 3/16/2023* .**

Taxes are Delinquent as of N/A .

There is a lien on this property as of N/A .

*****EXEMPT FROM TAXES*****

Kacey B. Johnson, CTC, CPM
Collector of Taxes
KACEY B. JOHNSON, CTC, CPM

CITY OF ATLANTIC CITY
OFFICE OF TAX COLLECTOR
1301 BACHARACH BLVD, STE #126
ATLANTIC CITY, NEW JERSEY 08401
(609) 347-5630 FAX # 347-5621

CERTIFICATION OF PAYMENT

March 17, 2023

City of Atlantic City

This certifies that the taxes on Block: 1 Lot: 142

Location: 1100 BOARDWALK

Property Owner : DGMB CASINO LLC

are paid up to date as of 2/9/2023* .**

Taxes are Delinquent as of N/A .

There is a lien on this property as of N/A .

*****CASINO PILOT*****

Kacey B. Johnson, CTC, CPM
Collector of Taxes
KACEY B. JOHNSON, CTC, CPM

CITY OF ATLANTIC CITY
OFFICE OF TAX COLLECTOR
1301 BACHARACH BLVD, STE #126
ATLANTIC CITY, NEW JERSEY 08401
(609) 347-5630 FAX # 347-5621

CERTIFICATION OF PAYMENT

March 17, 2023

City of Atlantic City

This certifies that the taxes on Block: 1 Lot: 142.01

Location: 1100 BOARDWALK

Property Owner : DGMB CASINO LLC

are paid up to date as of 2/9/2023* .**

Taxes are Delinquent as of N/A .

There is a lien on this property as of N/A .

*****CASINO PILOT*****

Kacey B. Johnson, CTC, CPM
Collector of Taxes
KACEY B. JOHNSON, CTC, CPM

ESCROW SETUP INFORMATION

The Information below is necessary to initially set up your Escrow Account.

Applicant's Name: IMCMV Atlantic City, LLC

Applicant's Address: 4901 Vineland Road, Suite 600, Orlando, FL 32811

*Applicant's Signature: _____
Nicholas F. Talvacchia, Esquire, Attorney for Applicants

Applicant's Phone No.: c/o NFT 609-572-7544

Applicant's Email Address: c/o NFT ntalvacchia@cooperlevenson.com

Applicant's Date of Birth: N/A

Tax Identification or Social Security Number: 46-4224511

Assigned Escrow #: _____

Should you require assistance or have any questions, please do not hesitate to contact:

Atlantic City Planning:

Lisa D'Alessandro, Board Secretary
City of Atlantic City Planning
1301 Bacharach Boulevard
City Hall-Suite 508
Atlantic City, NJ 08401
Email: LDAlessandro@cityofatlanticcity.org
609-347-5404

CRDA:

Loreta Acevedo, Project Officer
Casino Reinvestment Development Authority
15 S Pennsylvania Avenue
Atlantic City, NJ 08401
Email: lacevedo@njcrda.com
609-347-0500

COOPER LEVENSON, P.A.
1125 ATLANTIC AVENUE • THE THIRD FLOOR
ATLANTIC CITY, NEW JERSEY 08401
ATTORNEY BUSINESS ACCOUNT

641345

CHECK #

Fulton Bank N.A.

60-142/313

DATE

03-17-23

AMOUNT

$300.00

PAY THE AMOUNT OF THREE HUNDRED AND 00/100

PAY TO

CRDA
15 SO. PENNSYLVANIA AVE.

ATLANTIC CITY, NJ 08401

AUTHORIZED SIGNATURE

Details on back.

⑈641345⑈ ⑆031301422⑆ 0008307393⑈

COOPER LEVENSON, P.A.
1125 ATLANTIC AVENUE • THE THIRD FLOOR
ATLANTIC CITY, NEW JERSEY 08401
(609) 344-3161

641345

11135CASINO REINVESTMENT DEVELOPMENT AUTHORITY

INVOICE	INV. DATE	DESCRIPTION	VOUCHER I.D.	NET AMOUNT
LKN/C/0316	203-16-23	64788.00001	374044	300.00

PRODUCT FLV550 MCBEE To Reorder: 1-800-582-2331 or www.mcbeeinc.com

COOPER LEVENSON, P.A.
1125 ATLANTIC AVENUE • THE THIRD FLOOR
ATLANTIC CITY, NEW JERSEY 08401
ATTORNEY BUSINESS ACCOUNT

641347

CHECK #

Fulton Bank N.A.

60-142/313

DATE 03-17-23

AMOUNT $250.00

PAY THE AMOUNT OF TWO HUNDRED FIFTY AND 00/100

PAY TO

CRDA
15 SO. PENNSYLVANIA AVE.

ATLANTIC CITY, NJ 08401

AUTHORIZED SIGNATURE

Details on back.

⑈641347⑈ ⑆031301422⑆ 0008307393⑈

COOPER LEVENSON, P.A.
1125 ATLANTIC AVENUE • THE THIRD FLOOR
ATLANTIC CITY, NEW JERSEY 08401
(609) 344-3161

641347

11135CASINO REINVESTMENT DEVELOPMENT AUTHORITY

INVOICE	INV. DATE	DESCRIPTION	VOUCHER I.D.	NET AMOUNT
LKN/E/0316	03-16-23	64788.00001	374046	250.00

PRODUCT FLY560 MOBEE To Reorder: 1-800-662-2931 or www.mcbeeinc.com

COOPER LEVENSON, P.A.
1125 ATLANTIC AVENUE • THE THIRD FLOOR
ATLANTIC CITY, NEW JERSEY 08401
ATTORNEY BUSINESS ACCOUNT

641346

CHECK #

Fulton Bank N.A.

60-142/313

DATE 03-17-23

AMOUNT $2,000.00

PAY THE AMOUNT OF TWO THOUSAND AND 00/100

PAY TO

CRDA
15 SO. PENNSYLVANIA AVE.

ATLANTIC CITY, NJ 08401

AUTHORIZED SIGNATURE

Details on back.

⑈641346⑈ ⑆031301422⑆ 0008307393⑈

COOPER LEVENSON, P.A.
1125 ATLANTIC AVENUE • THE THIRD FLOOR
ATLANTIC CITY, NEW JERSEY 08401
(609) 344-3161

641346

11135CASINO REINVESTMENT DEVELOPMENT AUTHORITY

INVOICE	INV. DATE	DESCRIPTION	VOUCHER I.D.	NET AMOUNT
LKN/D/0316	203-16-23	64788.00001	374045	2,000.00

PRODUCT FL/650 MCBEE To Reorder: 1-800-862-2331 or www.mcbeeinc.com

COOPER LEVENSON, P.A.
1125 ATLANTIC AVENUE • THE THIRD FLOOR
ATLANTIC CITY, NEW JERSEY 08401
ATTORNEY BUSINESS ACCOUNT

641348

CHECK #

Fulton Bank N.A.

60-142/313

DATE
03-17-23

AMOUNT
$2,200.00

PAY THE AMOUNT OF TWO THOUSAND TWO HUNDRED AND 00/100

PAY TO

CRDA
15 SO. PENNSYLVANIA AVE.

ATLANTIC CITY, NJ 08401

AUTHORIZED SIGNATURE

Details on back.

⑈641348⑈ ⑆031301422⑆ 0008307393⑈

COOPER LEVENSON, P.A.
1125 ATLANTIC AVENUE • THE THIRD FLOOR
ATLANTIC CITY, NEW JERSEY 08401
(609) 344-3161

641348

11135CASINO REINVESTMENT DEVELOPMENT AUTHORITY

INVOICE	INV. DATE	DESCRIPTION	VOUCHER I.D.	NET AMOUNT
LKN/F/0316	203-16-23	64788.00001	374047	2,200.00

PRODUCT FLV550 MCBEE To Reorder: 1-800-662-2331 or www.mcbeeinc.com