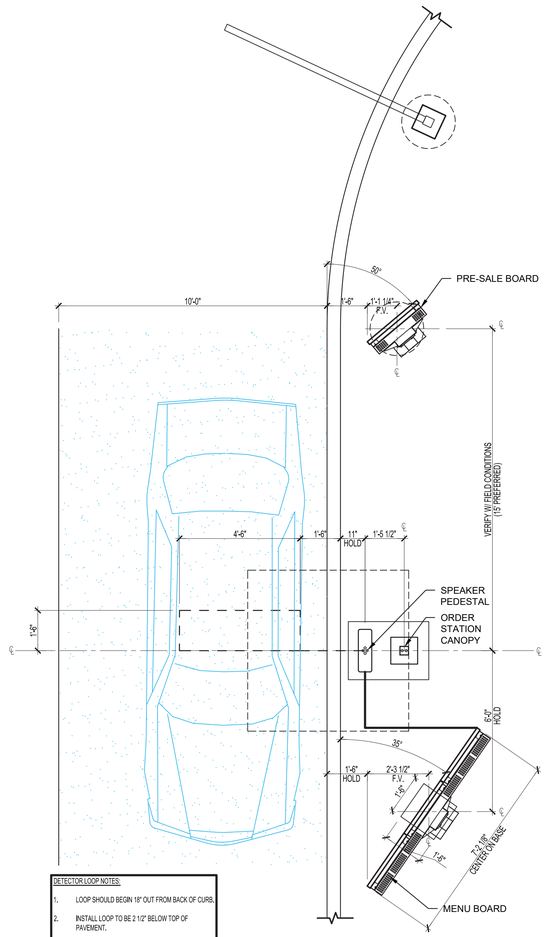

DETECTOR LOOP NOTES:

1. LOOP SHOULD BEGIN 18" OUT FROM BACK OF CURB.
2. INSTALL LOOP TO BE 2 1/2" BELOW TOP OF PAVEMENT.
3. THE FORWARD EDGE OF THE LOOP SHOULD BE LINED UP WITH CENTERLINE OF THE DRIVE-THRU WINDOW OR SPEAKER PEDESTAL.
4. A 3' AREA FROM THE LOOP MUST BE KEPT CLEAR OF METAL, INCLUDING REBAR, REINFORCING MESH, OTHER ELECTRICAL CABLES OR CONDUIT.
5. SEE DETECTOR LOOP MANUFACTURER'S INSTALLATION INSTRUCTIONS FOR ADDITIONAL INFORMATION.
6. SEE G2.1 RESPONSIBILITY SCHEDULE FOR ADDITIONAL INFORMATION.

ORDER STATION PLAN VIEW

N.T.S.

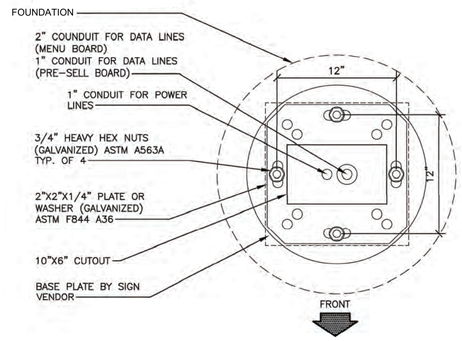

PRE-SALE BOARD FOOTING

N.T.S.

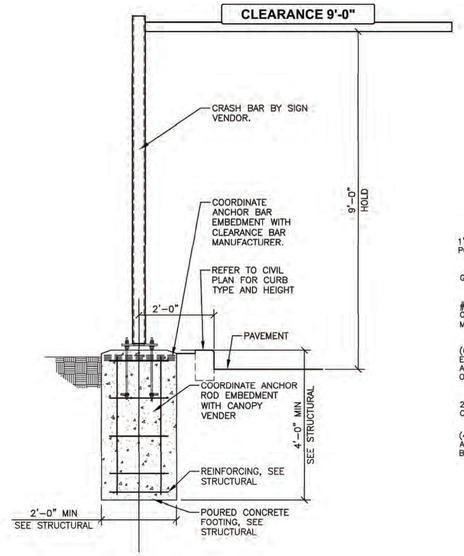

CANOPY PROTECTION BAR

N.T.S.

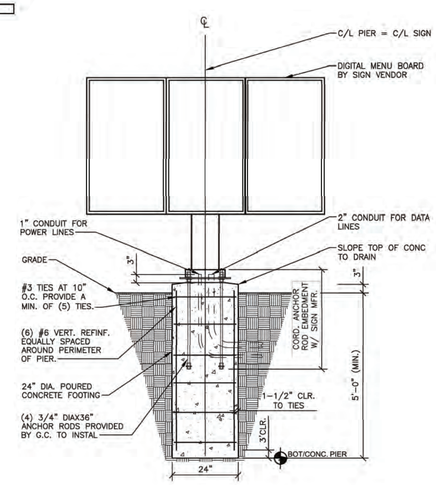

MENU BOARD FOUNDATION

N.T.S.

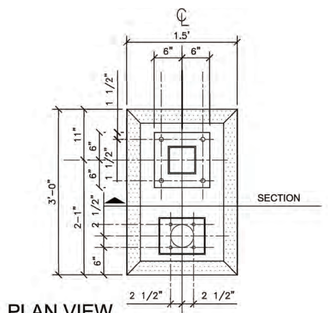

PLAN VIEW

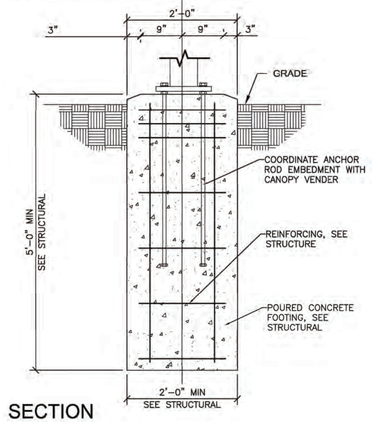

SECTION

CANOPY FOOTING

N.T.S.

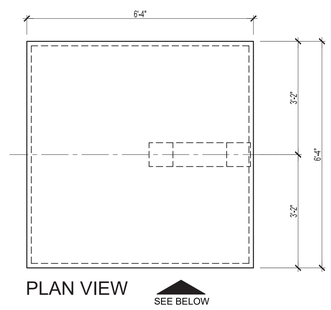

PLAN VIEW

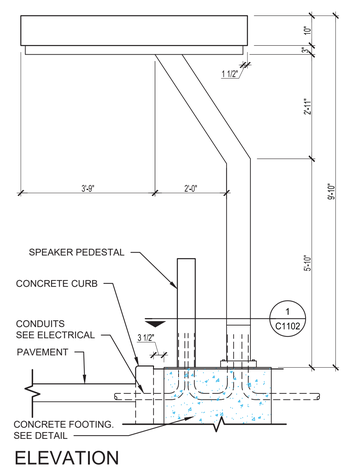

ELEVATION

ORDER STATION CANOPY

N.T.S.

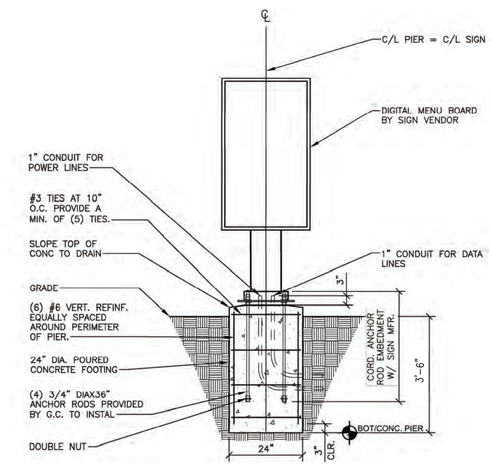

PRE-SALE BOARD FOUNDATION

N.T.S.

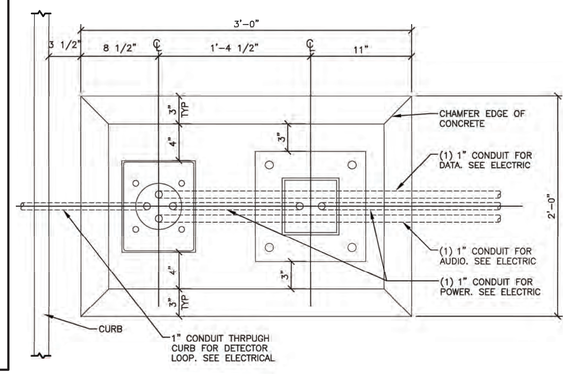

ORDER STATION CANOPY FOOTINGS

N.T.S.

811 Know what's below. Call before you dig.

1. EXISTING UTILITY INFORMATION SHOWN ON THESE PLANS IS FURNISHED BY THE UTILITY COMPANIES AND/OR THE SURVEYOR AND THE ACCURACY THEREOF IS NOT THE RESPONSIBILITY OF SCIULLO ENGINEERING SERVICES, LLC. IT IS THE RESPONSIBILITY OF THE OWNERS AND/OR CONTRACTOR TO CALL 1-800-272-1000 FOR FIELD LOCATION OF UNDERGROUND UTILITIES PRIOR TO CONSTRUCTION.
2. THESE PLANS ARE NOT FOR CONSTRUCTION UNTIL "ISSUED FOR CONSTRUCTION" APPEARS IN THE TITLEBLOCK.

ALL DOCUMENTS PREPARED BY SCIULLO ENGINEERING SERVICES, LLC ARE INSTRUMENTS OF SERVICE IN RESPECT TO THE PROJECT. THEY ARE NOT INTENDED OR REPRESENTED TO BE SUITABLE FOR REUSE BY OWNER OR OTHERS ON EXTENSIONS OF THE PROJECT OR ON ANY OTHER PROJECT. ANY REUSE WITHOUT WRITTEN VERIFICATION OR ADAPTATION BY SCIULLO ENGINEERING SERVICES, LLC FOR THE SPECIFIC PURPOSE INTENDED WILL BE AT OWNER'S SOLE RISK AND WITHOUT LIABILITY OR LEGAL EXPOSURE TO SCIULLO ENGINEERING SERVICES, LLC. OWNER SHALL INDEMNIFY AND HOLD HARMLESS SCIULLO ENGINEERING SERVICES, LLC FROM ALL CLAIMS, DAMAGES, LOSSES AND EXPENSES ARISING OUT OF OR RESULTING THEREFROM.

JASON T. SCIULLO, P.E., P.P.
PROFESSIONAL ENGINEER, NEW JERSEY LICENSE NO. 24GE04368100
PROFESSIONAL PLANNER, NEW JERSEY LICENSE NO. 33LI00628400
jsciullo@sciulloengineering.com

SCIULLO ENGINEERING SERVICES, LLC
137 S. NEW YORK AVENUE, SUITE 2
ATLANTIC CITY, NEW JERSEY 08401
PHONE: (609) 300-5171
www.sciulloengineering.com
NJ CERTIFICATE OF AUTHORIZATION NO. 24GA28290700

Wendy's
BLOCK 330, LOTS 2-6, 24-29
ATLANTIC CITY, ATLANTIC COUNTY, NEW JERSEY 08401

DRIVE-THRU ORDER STATION DETAILS

163 WASHINGTON VALLEY ROAD, SUITE 104
WARREN, NJ 07059

TOM & CHILL

DATE	ISSUE NO.	SUBMISSION/REVISION	BY	APPR.
01/29/2026	1	INITIAL RELEASE	LAT	JTS

PROJECT NO. Y&C 001.01
SCALE AS SHOWN
SHEET 12 OF 18
DRAWING NO. C1104

CREATED ON: 10/23/2025, LAST MODIFIED ON: 01/07/2026
C:\USERS\LTAYLOR\ONEDRIVE - SCIULLO ENGINEERING SERVICES, LLC\TJ\JOBS TAYLOR - SHARED\PROJECTS\Y&C 0010 - 1820 ARCTIC AVE, ATLANTIC CITY\DWG\SITE PLANS\C1104.DWG